WABCO

An American-Standard Company

SERVICE MANUAL 5815

ALUMINUM CROSSING GATE

MODEL AL-70

INSTALLATION AND MAINTENANCE

* * * * * * * * * * *

CONTENTS

SECTION		PAGE
I.	INTRODUCTION	2
II.	DESCRIPTION	2
III.	OPERATION	5
IV.	INSTALLATION PROCEDURE	5
V.	EQUIPMENT ADJUSTMENT AND CHECKOUT PROCEDURE	9
VI.	MAINTENANCE PROCEDURES	11
VII.	LUBRICATION	11
VIII.	PARTS LIST	12

January, 1979
C-79-50-1212-7

PRINTED IN U.S.A.

UNION SWITCH & SIGNAL DIVISION
WESTINGHOUSE AIR BRAKE COMPANY
Swissvale, PA 15218

I. INTRODUCTION

The WABCO Model AL-70 Aluminum Crossing Gate developed by WABCO Union Switch & Signal Division, is designed to provide automatic gate arm protection at grade crossings where 16 to 32 feet gate arms are required. The original arm was 16 to 26 feet. A second arm extendible from 27 to 32 feet is now available. The latter requires additional counterweights and a heavier shear pin.

A unique and economical feature of this Model AL-70 Aluminum Crossing Gate is that it can be applied to existing AAR standard automatic flashing light signals with 4 or 5 inch masts.

II. DESCRIPTION

Basically, the Model AL-70 Aluminum Crossing Gate consists of two sub-assemblies: the operating mechanism which is housed in an aluminum sheet metal box and the extruded aluminum telescoping gate arm.

The wiring diagram in Figure 1 is provided for use in making wire connections in the mechanism housing, crossarm junction box, and junction box base.

A. OPERATING MECHANISM ASSEMBLY (FIGURE 4)

The operating mechanism assembly consists of the following: A DC electric motor with a 130:1 gear reduction train, which requires a nominal 12 volt power supply; a hold clear device, which is located on the motor armature shaft; a motor control relay, located next to the terminal board; and a circuit controller assembly, which has six contacts operated by a cam as illustrated in Figure 4. Three circuit controller contacts are wired for mechanism control and three contacts are available for controlling external circuits such as the bell and the clear position repeater relay. Contacts 1B-1C and 3B-3C are adjustable from 70° to 90°.

Rubber shock absorbers with adjustable stop bolts are provided as shown in Figure 4. The stop bolts are used to position the gate arm in the horizontal position and to absorb shock of the arm support moving rapidly to the vertical position in the event of a vehicle knocking off the gate arm.

One end of the splined main shaft extends out of the mechanism for mounting the high strength steel arm support.

Total weight of the operating mechanism without the gate arm assembly, is approximately 180 lbs.

I. INTRODUCTION

The WABCO Model AL-70 Aluminum Crossing Gate developed by WABCO Union Switch & Signal Division, is designed to provide automatic gate arm protection at grade crossings where 16 to 32 feet gate arms are required. The original arm was 16 to 26 feet. A second arm extendible from 27 to 32 feet is now available. The latter requires additional counterweights and a heavier shear pin.

A unique and economical feature of this Model AL-70 Aluminum Crossing Gate is that it can be applied to existing AAR standard automatic flashing light signals with 4 or 5 inch masts.

II. DESCRIPTION

Basically, the Model AL-70 Aluminum Crossing Gate consists of two sub-assemblies: the operating mechanism which is housed in an aluminum sheet metal box and the extruded aluminum telescoping gate arm.

The wiring diagram in Figure 1 is provided for use in making wire connections in the mechanism housing, crossarm junction box, and junction box base.

A. OPERATING MECHANISM ASSEMBLY (FIGURE 4)

The operating mechanism assembly consists of the following: A DC electric motor with a 130:1 gear reduction train, which requires a nominal 12 volt power supply; a hold clear device, which is located on the motor armature shaft; a motor control relay, located next to the terminal board; and a circuit controller assembly, which has six contacts operated by a cam as illustrated in Figure 4. Three circuit controller contacts are wired for mechanism control and three contacts are available for controlling external circuits such as the bell and the clear position repeater relay. Contacts 1B-1C and 3B-3C are adjustable from 70° to 90°.

Rubber shock absorbers with adjustable stop bolts are provided as shown in Figure 4. The stop bolts are used to position the gate arm in the horizontal position and to absorb shock of the arm support moving rapidly to the vertical position in the event of a vehicle knocking off the gate arm.

One end of the splined main shaft extends out of the mechanism for mounting the high strength steel arm support.

Total weight of the operating mechanism without the gate arm assembly, is approximately 180 lbs.

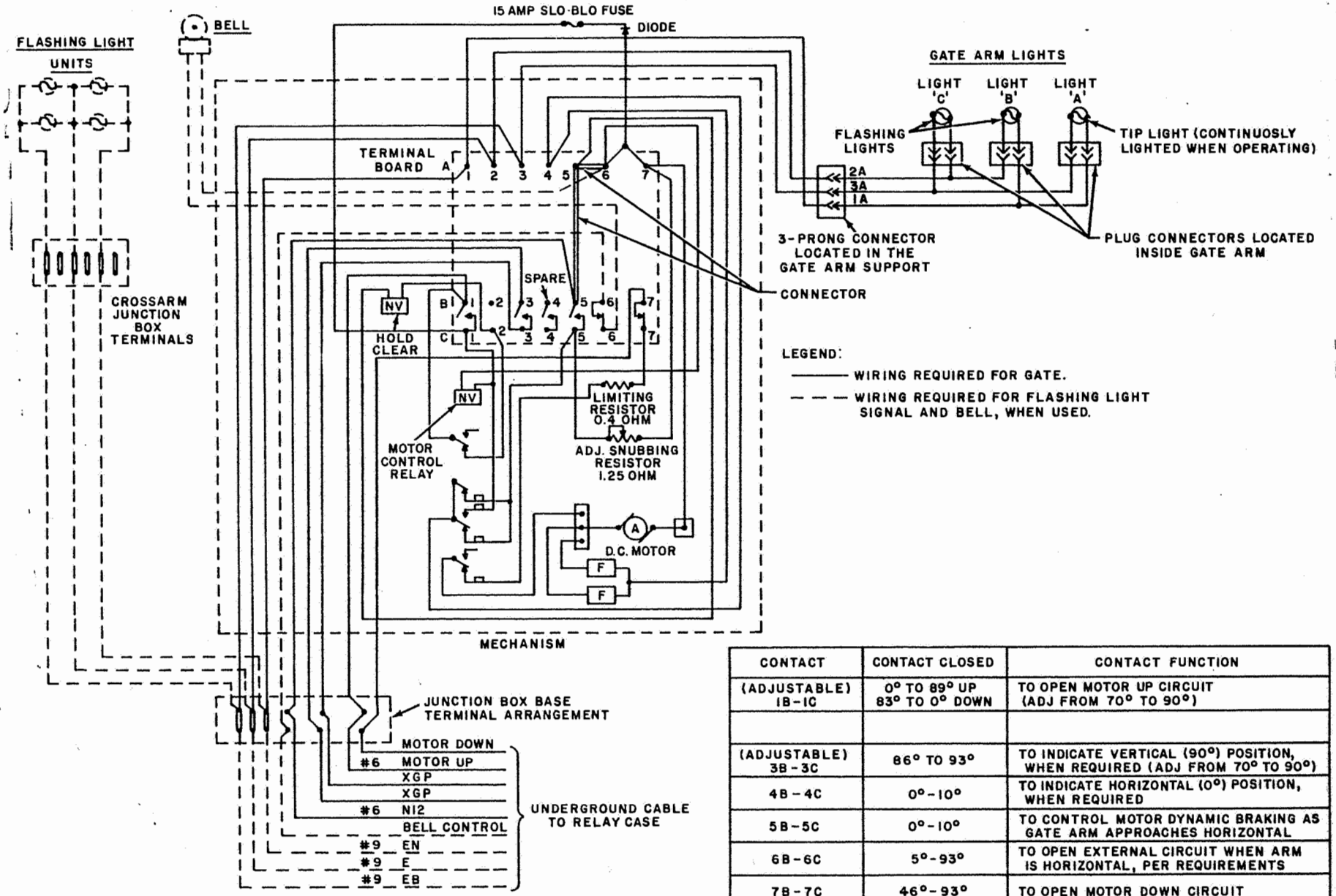

CONTACT	CONTACT CLOSED	CONTACT FUNCTION
(ADJUSTABLE) 1B-1C	0° TO 89° UP 83° TO 0° DOWN	TO OPEN MOTOR UP CIRCUIT (ADJ FROM 70° TO 90°)
(ADJUSTABLE) 3B-3C	86° TO 93°	TO INDICATE VERTICAL (90°) POSITION, WHEN REQUIRED (ADJ FROM 70° TO 90°)
4B-4C	0°-10°	TO INDICATE HORIZONTAL (0°) POSITION, WHEN REQUIRED
5B-5C	0°-10°	TO CONTROL MOTOR DYNAMIC BRAKING AS GATE ARM APPROACHES HORIZONTAL
6B-6C	5°-93°	TO OPEN EXTERNAL CIRCUIT WHEN ARM IS HORIZONTAL, PER REQUIREMENTS
7B-7C	46°-93°	TO OPEN MOTOR DOWN CIRCUIT

Figure 1. Typical Wiring Diagram for AL-70 Gate with Flashing Light Signals

B. GATE ARM ASSEMBLY (FIGURE 3)

The telescoping gate arm consists of three sections of extruded aluminum. When the 26 foot gate configuration is used, the length of the gate arm may be adjusted from 26 to 21 feet by telescoping the second and third (tip) sections per data shown in Table 1, Figure 3. Arm lengths can be further reduced from 21 to 16 feet by cutting off inner portions of the second and third sections as shown in Table 1, Figure 3.

When a 32 foot gate configuration is used, the length of the gate arm may be adjusted from 32 to 27 feet by telescoping the second and third (tip) sections per data shown in Table 1, Figure 3.

To warn oncoming vehicular traffic, three 10 volt weather-proof bi-directional lamps are mounted on the arm. In addition, the arm is equipped with alternate red and white reflective "Scotchlite" sheeting.

The total weight of the assembled gate arm sections, with three lights, is approximately 30 lbs.

The counterweights are adjustable to provide proper horizontal torque for arms varying from 16 to 26 feet long, and from 27 to 32 feet long. Two additional 20 lb. counter-weights are required for the 32 foot gates.

C. TECHNICAL DATA

When planning a grade crossing installation, consideration must be given to WIRE SIZE AND BATTERY. Sizes of wire used for the motor circuit should be calculated to ensure that there is not more than 0.1 ohm resistance between the battery and mechanism terminals.

The following wire sizes are recommended:

WIRE LENGTH FROM RELAY CASE TO JUNCTION BOX BASE TERMINALS	SIZE OF SOFT DRAWN COPPER WIRE TO USE
Up to 60 feet (120 feet of wire)	No. 9 AWG
From 60 to 120 feet (240 feet of wire)	No. 6 AWG

B. GATE ARM ASSEMBLY (FIGURE 3)

The telescoping gate arm consists of three sections of extruded aluminum. When the 26 foot gate configuration is used, the length of the gate arm may be adjusted from 26 to 21 feet by telescoping the second and third (tip) sections per data shown in Table 1, Figure 3. Arm lengths can be further reduced from 21 to 16 feet by cutting off inner portions of the second and third sections as shown in Table 1, Figure 3.

When a 32 foot gate configuration is used, the length of the gate arm may be adjusted from 32 to 27 feet by telescoping the second and third (tip) sections per data shown in Table 1, Figure 3.

To warn oncoming vehicular traffic, three 10 volt weather-proof bi-directional lamps are mounted on the arm. In addition, the arm is equipped with alternate red and white reflective "Scotchlite" sheeting.

The total weight of the assembled gate arm sections, with three lights, is approximately 30 lbs.

The counterweights are adjustable to provide proper horizontal torque for arms varying from 16 to 26 feet long, and from 27 to 32 feet long. Two additional 20 lb. counter-weights are required for the 32 foot gates.

C. TECHNICAL DATA

When planning a grade crossing installation, consideration must be given to WIRE SIZE AND BATTERY. Sizes of wire used for the motor circuit should be calculated to ensure that there is not more than 0.1 ohm resistance between the battery and mechanism terminals.

The following wire sizes are recommended:

WIRE LENGTH FROM RELAY CASE TO JUNCTION BOX BASE TERMINALS	SIZE OF SOFT DRAWN COPPER WIRE TO USE
Up to 60 feet (120 feet of wire)	No. 9 AWG
From 60 to 120 feet (240 feet of wire)	No. 6 AWG

To suit the power requirements, the following battery is recommended:

NUMBER OF CELLS		
Lead	Nickel Iron	Nickel Cadmium
6	9	9

III. OPERATION

The gate arm is normally held in the clear position with the hold clear energized. When the gate mechanism control circuits are actuated for the descending movement of the gate arm, the hold clear is deenergized. Simultaneously, the motor down circuit is energized through a limiting resistor with the motor control relay deenergized. The motor drives the gate arm down from 90° to 45°. Further movement of the gate arm towards the horizontal position is obtained by gravity with the motor acting as a generator. The motor discharges its current through the adjustable snubbing resistor; and in the final 10° descent of the gate arm travel, a direct shunt (with No. 5 contact closed) is applied across the motor to increase the braking action and bring the arm to a cushioned stop.

Descending time of the gate arm may be varied by adjustment of the snubbing resistor. The torque of the arm (with counterweights) is designed so the arm will descend from the vertical to the horizontal position by gravity in case there is a lack of power for motor drive down.

The gate arm will return to the clear position when the motor up circuit is energized. When the arm is in the clear position, the motor drive circuit is opened and the hold clear is energized through the deenergized motor control relay.

The two piece cam has an adjustable feature which can be adjusted to open the motor up circuit from 70° to 90°. See Section V "Equipment Adjustment and Checkout Procedure".

IV. INSTALLATION PROCEDURE

The following installation procedure is recommended for erecting the AL-70 Aluminum Crossing Gate signals. At locations where flashing light signals are existing, begin with instructions under "Operating Mechanism Assembly".

A. MAST AND BASE

Refer to Figure 2 for erecting mast and base.

1. Check the foundation and bolts for proper alignment. Generally the top of the foundation is six inches above the crown of the road.

2. Mount junction box base and mast on foundation. Ensure that the junction box base and opening in the upper part of the mast (for flashing light signal junction box and crossarm) are in the proper position with relation to the roadway. See Figure 2A and 2B.

3. Install flashing light junction box crossarm and flashing light units.

4. Mount signs at the proper height as shown in Figure 2.

5. Install bell or pipe cap on top of the mast. If a bell is required, it should be mounted with the gong parallel with the roadway.

6. Make proper wiring connections (for flashing light units and bell) between crossarm junction box and junction box base as shown in Figure 1 (Typical Wiring Diagram).

B. OPERATING MECHANISM ASSEMBLY

1. For an existing mast, cut a hole two inches in diameter, 36 inches above the top of the foundation and 65° off center as shown in Figure 2C. (New masts are pre-drilled at the factory.)

2. Attach two clamps to the mast approximately 57 inches above the crown of the highway. This will permit the gate mechanism to be turned so that gate arm installations can be performed off the roadway. Clamp the gate mechanism (1) Figure 1 (without the gate arm support) to the mast on the side away from the roadway so that the center of the splined shaft is 65-1/2 inches above the top of the foundation. The horizontal center of the gate arm should then be about 42 inches above the crown of the highway. This is with the top of the foundation six inches above the crown of the highway as indicated in Figure 2.

NOTE

When assembling mechanism to a 5" mast, discard four 3/4 - 10 x 7-1/2 in. lg. bolts and use four 3/4 - 10 x 8-1/2 in. lg. bolts (J046752).

3. Before mounting the flexible conduit to the mechanism and mast, determine the length and number of wires that are required for making connections between the mechanism and the junction box base. See Figure 1 (Typical Wiring Diagram).

2. Mount junction box base and mast on foundation. Ensure that the junction box base and opening in the upper part of the mast (for flashing light signal junction box and crossarm) are in the proper position with relation to the roadway. See Figure 2A and 2B.

3. Install flashing light junction box crossarm and flashing light units.

4. Mount signs at the proper height as shown in Figure 2.

5. Install bell or pipe cap on top of the mast. If a bell is required, it should be mounted with the gong parallel with the roadway.

6. Make proper wiring connections (for flashing light units and bell) between crossarm junction box and junction box base as shown in Figure 1 (Typical Wiring Diagram).

B. OPERATING MECHANISM ASSEMBLY

1. For an existing mast, cut a hole two inches in diameter, 36 inches above the top of the foundation and 65° off center as shown in Figure 2C. (New masts are pre-drilled at the factory.)

2. Attach two clamps to the mast approximately 57 inches above the crown of the highway. This will permit the gate mechanism to be turned so that gate arm installations can be performed off the roadway. Clamp the gate mechanism (1) Figure 1 (without the gate arm support) to the mast on the side away from the roadway so that the center of the splined shaft is 65-1/2 inches above the top of the foundation. The horizontal center of the gate arm should then be about 42 inches above the crown of the highway. This is with the top of the foundation six inches above the crown of the highway as indicated in Figure 2.

NOTE

When assembling mechanism to a 5" mast, discard four 3/4 - 10 x 7-1/2 in. lg. bolts and use four 3/4 - 10 x 8-1/2 in. lg. bolts (J046752).

3. Before mounting the flexible conduit to the mechanism and mast, determine the length and number of wires that are required for making connections between the mechanism and the junction box base. See Figure 1 (Typical Wiring Diagram).

Then completely assemble the flexible conduit (4) with connector (5), elbow (6), and pipe clamp (7), and insert the wires in the conduit at the approximate position they will be when installation is complete.

4. Place conduit nut (62) and box connector (61) in position in mechanism housing as shown in Figure 4. Insert wires into the mechanism housing and connect conduit to housing.

5. Then insert wires into the mast (2" hole below mechanism) and pull out the free ends at the junction box base (allow plenty of slack) and leave pipe clamp(7) disconnected temporarily.

NOTE

Pipe clamp (7) may be attached to the mast if there is sufficient length, depending on how far the mechanism is turned off the roadway.

6. Connect both ends of the wires in accordance with Figure 1 (Typical Wiring Diagram).

The standard half junction box base which has 12 terminals mounted inside is adequate to handle the control circuits, gate arm lights and the signal flashing lights. However, in order to provide sufficient terminal space, some of the jumper straps will have to be removed when the light weight gate is installed on an existing signal mast.

C. GATE ARM ASSEMBLY

Refer to Figure 3 for assembling gate arm.

1. Turn the main shaft clockwise to the position it assumes when the gate arm is in the horizontal position. This condition exists when the sector gear (14, Figure 4) is in contact with the upper stop bolt (90).

NOTE

To lock the mechanism in position temporarily, insert a bolt or tool through one of the 3/8 inch holes in the gear as shown in Figure 4. This will hold the mechanism in the horizontal position to aid gate arm installation.

2. Apply the gate arm support (14) in the horizontal position to the splined shaft of the mechanism. (Remove shipping separator from splined shaft.)

3. Refer to Table 1 for proper telescoping of the arm for desired length taking care not to damage gate arm light wires.

After the desired length of the arm has been determined, lay the three aluminum arm sections on a flat surface and assemble per Figure 3. Insert proper bolts in 1st and 2nd sections (per section "X-X" and "Y-Y") as indicated and tighten securely.

4. Place the assembled arm in the channel section of the gate arm support (14). Secure the arm with the proper shear pin (11) per section "W-W". For a 26 ft. arm use Pin .205 (stamped on bolt head) and for a 32 ft. arm use Pin .220.

NOTE

Tighten nut (12) on shear pin BY HAND to prevent damage to the pin and insert cotter key (13).

Adjust support plate (Figure 3D) so that it bears against the end of the arm, then tighten support plate bolts. Adjust two bolts on back side of the support by hand to take up side play and align arm properly in the arm support channel. Hand tighten the remaining four channel bolts to take up slack between the arm and support channel and then secure all six bolts by tightening lock nuts. Hold the bolt heads with a wrench to prevent the bolts from turning while tightening lock nuts.

CAUTION

Excessive tightening of channel bolts may damage or distort the arm support and change the shearing characteristics.

5. The lens for each gate arm light must be removed to insert bulbs which are packed separately for shipment to prevent breakage. This can be accomplished by removing three screws from either side of the lamp assembly. See illustration in Figure 3C.

6. Insert the plug on the end of the arm wiring harness into the receptacle attached to the support plate as shown in Figure 3D. Then loop the 3-conductor cable between the mast and mechanism box, through the cable grip (7) shown in Figure 4, and into the mechanism box.

Connect the 3-conductor cable (wires 1A, 2A, and 3A) to the terminal board inside housing as shown in Figure 1 (Typical Wiring Diagram).

7. Apply the proper counterweight according to the arm length as shown in Figure 3, Table 2.

8. Rotate the mechanism on the mast so the gate arm is properly positioned over the roadway before raising the arm.

3. Refer to Table 1 for proper telescoping of the arm for desired length taking care not to damage gate arm light wires.

After the desired length of the arm has been determined, lay the three aluminum arm sections on a flat surface and assemble per Figure 3. Insert proper bolts in 1st and 2nd sections (per section "X-X" and "Y-Y") as indicated and tighten securely.

4. Place the assembled arm in the channel section of the gate arm support (14). Secure the arm with the proper shear pin (11) per section "W-W". For a 26 ft. arm use Pin .205 (stamped on bolt head) and for a 32 ft. arm use Pin .220.

NOTE

Tighten nut (12) on shear pin BY HAND to prevent damage to the pin and insert cotter key (13).

Adjust support plate (Figure 3D) so that it bears against the end of the arm, then tighten support plate bolts. Adjust two bolts on back side of the support by hand to take up side play and align arm properly in the arm support channel. Hand tighten the remaining four channel bolts to take up slack between the arm and support channel and then secure all six bolts by tightening lock nuts. Hold the bolt heads with a wrench to prevent the bolts from turning while tightening lock nuts.

CAUTION

Excessive tightening of channel bolts may damage or distort the arm support and change the shearing characteristics.

5. The lens for each gate arm light must be removed to insert bulbs which are packed separately for shipment to prevent breakage. This can be accomplished by removing three screws from either side of the lamp assembly. See illustration in Figure 3C.

6. Insert the plug on the end of the arm wiring harness into the receptacle attached to the support plate as shown in Figure 3D. Then loop the 3-conductor cable between the mast and mechanism box, through the cable grip (7) shown in Figure 4, and into the mechanism box.

Connect the 3-conductor cable (wires 1A, 2A, and 3A) to the terminal board inside housing as shown in Figure 1 (Typical Wiring Diagram).

7. Apply the proper counterweight according to the arm length as shown in Figure 3, Table 2.

8. Rotate the mechanism on the mast so the gate arm is properly positioned over the roadway before raising the arm.

NOTE

Before continuing with step 9, remove the temporary lock from the gear that was suggested in step 1 to hold the mechanism in the horizontal position.

9. Adjust the horizontal arm position by the following procedure. See Figure 4.

a. Loosen the lock nut and turn the slotted screw on the bumper stop assembly (114). A screwdriver can be used to make this adjustment.

b. After the arm is in the desired position, tighten the lock nut firmly.

The stop bolt (32) on the lower bumper stop is factory adjusted to clear the sector gear with arm in the clear position.

10. Fasten pipe clamp (7) (Figure 2) to mast (insert excess wire slack into mast).

11. Mount vents (8) on housing with the opening facing down (see Figure 4).

V. EQUIPMENT ADJUSTMENT AND CHECKOUT PROCEDURE

The following adjustments and checks should be performed to ensure proper operation of the equipment.

1. The adjustable cam is set at the factory to release the motor up circuit when the gate arm is in the vertical position (90°).

If it is desired to stop the gate arm between 70° to 90°, perform the following adjustment. See adjustable cam assembly illustrated in Figure 4.

a. Move the gate arm to the horizontal position.

b. Loosen the two slotted bolts (108) that hold the adjustable portion of the cam (102) to the fixed cam (103).

c. Rotate the adjustable cam down to the desired position and tighten the slotted bolts.

With the adjustable cam rotated to maximum down position, the motor up circuit will release when the gate arm is at a 70° angle.

2. Check the descending and clearing time of the arm with a stop watch. The normal descending time should be between 8 and 15 seconds. This time can be varied by means of adjusting the snubbing resistor (65).

A 26 foot gate arm in the horizontal position should clear within 9 to 11 seconds. Motor current should read approximately 10 amperes at the end of the stroke with a nominal 12 volt power supply. A 32 foot gate arm in the horizontal position should clear in approximately 13 seconds. Motor current should read approximately 12 amperes with a nominal 12 volt power supply. Higher input voltages will decrease the time it takes for the gate to clear.

IMPORTANT

To provide a good electrical connection for the snub circuit, care should be taken to see that the slide contact on the snubbing resistor is bearing on the winding with firm pressure and that the lock nut is tightened to hold the slide securely in place. Also check other termination points in the circuit.

The hold clear armature air gap should be set with a 0.010 inch thick gage with the motor armature end play taken up in the direction away from the hold clear. This adjustment can be made with an Allen (Hex.) wrench.

3. Check to ensure that the circuit controller, motor control relay contacts, and hold clear armature are free from oil, grease, and dirt particles.

4. The outer contact spring mounted on terminal 1 has two parts. The smaller part is a stop spring to limit the travel of the outer spring. See Figure 4. There must be an air gap of 0.020 inch between the two parts when this contact is made with the inner contact spring riding the cam. This adjustment is made by bending the contact spring (68) just below the terminal board.

5. When the gate mechanism is in operation, check to see that the flashing light units on the mast and gate arm are all flashing alternately and properly. If any of the gate arm lights are not functioning, check the plug connector located inside the gate arm by removing the respective access plate below the light. See Figure 3C.

2. Check the descending and clearing time of the arm with a stop watch. The normal descending time should be between 8 and 15 seconds. This time can be varied by means of adjusting the snubbing resistor (65).

A 26 foot gate arm in the horizontal position should clear within 9 to 11 seconds. Motor current should read approximately 10 amperes at the end of the stroke with a nominal 12 volt power supply. A 32 foot gate arm in the horizontal position should clear in approximately 13 seconds. Motor current should read approximately 12 amperes with a nominal 12 volt power supply. Higher input voltages will decrease the time it takes for the gate to clear.

IMPORTANT

To provide a good electrical connection for the snub circuit, care should be taken to see that the slide contact on the snubbing resistor is bearing on the winding with firm pressure and that the lock nut is tightened to hold the slide securely in place. Also check other termination points in the circuit.

The hold clear armature air gap should be set with a 0.010 inch thick gage with the motor armature end play taken up in the direction away from the hold clear. This adjustment can be made with an Allen (Hex.) wrench.

3. Check to ensure that the circuit controller, motor control relay contacts, and hold clear armature are free from oil, grease, and dirt particles.

4. The outer contact spring mounted on terminal 1 has two parts. The smaller part is a stop spring to limit the travel of the outer spring. See Figure 4. There must be an air gap of 0.020 inch between the two parts when this contact is made with the inner contact spring riding the cam. This adjustment is made by bending the contact spring (68) just below the terminal board.

5. When the gate mechanism is in operation, check to see that the flashing light units on the mast and gate arm are all flashing alternately and properly. If any of the gate arm lights are not functioning, check the plug connector located inside the gate arm by removing the respective access plate below the light. See Figure 3C.

VI. MAINTENANCE PROCEDURE

Commutator and brushes should be checked periodically and cleaned with a dry cloth. Brushes are pre-adjusted at the factory. However, worn brushes should be replaced when the flat spring bearing against the upper end of the brush comes within 1/16 inch of resting on the brush holder.

Circuit controller contacts should be checked at regular intervals for proper opening. All contact openings are factory adjusted to have a 3 to 3-1/2 pound force between the nylon cam follower and cam and to have a 1-1/2 to 1-3/4 pound closed contact pressure. This adjustment will provide a minimum contact opening of 1/16" and a maximum wipe of 1/64 inch when gate arm is in the clear position. With gate arm in the clear position, the force to move the nylon cam follower away from the cam rocker arm should be approximately 1/4 pound. This force should be measured by pulling the spring adjacent to the top of the cam follower. See Figure 4.

VII. LUBRICATION

Mechanism gear train and main shaft bearings are pre-lubricated and double sealed at the factory.

The gear teeth and circuit controller cam surface are to be given a light brush coat of lubricant. Texaco Regal AFB2 (MIL-G-3278) grease is recommended for all-weather gear lubrication. The time interval for lubricating the gears depends on usage and should be determined by the customer.

WABCO

VIII. PARTS LIST

The following parts list for the AL-70 Crossing Gate is keyed to Figure 2. Parts apply to all gates except as noted.

ITEM	DESCRIPTION	WABCO Part #
1	Mechanism, Crossing Gate	N451070-0101
2	Mast, 4" pipe - steel, complete with base (9-1/2" x 9-1/2")	N434115
3	Mast, 4" pipe - aluminum, complete with base (11-11/16" x 11-11/16")	N434974
4	Conduit, 1-1/2" flex.	M320858-019
5	Connector, 1-1/2" box	J700746
6	Elbow, 1-1/2" x 45° street (galv)	J032596
7	Clamp, with 1-1/2" pipe tap complete (galv.)	J033182
8	Signal Unit, with red plastic 30°/15° roundel	N394817
9	Lamp, 10V, 18W, S-11, CCG, SC base	J071463
	Lamp, 10V, 25W, S-11, CCG, SC base	J071574
10	*Sign, Number Tracks (Spec. "No.") if ordered	X392929
11	Sign, "Railroad Crossing" (4" Mast)	X392931-001
12	Hood	M390714
13	Background	M390713
14	U-Bolt, 5/8"	M392791
15	Nut, 5/8 Hex. Stl. Cad. Pl.	J048020
16	Washer, 5/8 Stl. Plate Cad. Pl.	J047504
17	Cap, pipe	J026104
18	Clamp, mast	M433619
19	Washer, Lock	J047772
20	Bolt, Sq. Hd. 3/4-10 x 7-1/2 Lg. **	J046748
21	Nut, Hex. Hd.	J048026
22	*Foundation Bolt, 1" x 24"	M254806
23	*Nut, 1" Hex. Stl. Cad. Pl.	J048030
24	*Washer, 1" Stl. Plate Cad. Pl.	J047509
25	*Bell	N074357
26	*Adapter, for bell	N082254
27	Arm, cross	N390676
	*Sign, "STOP ON RED SIGNAL" complete (not shown)	X451070-0309

*Optional items not incl. in assemblies A to N. Items reqd. to be ordered separately.

**When applying gate to 5 inch mast, 4 bolts 3/4"-10 x 8-1/2", J046752 must be ordered separately.

WABCO

VIII. PARTS LIST

The following parts list for the AL-70 Crossing Gate is keyed to Figure 2. Parts apply to all gates except as noted.

ITEM	DESCRIPTION	WABCO Part #
1	Mechanism, Crossing Gate	N451070-0101
2	Mast, 4" pipe - steel, complete with base (9-1/2" x 9-1/2")	N434115
3	Mast, 4" pipe - aluminum, complete with base (11-11/16" x 11-11/16")	N434974
4	Conduit, 1-1/2" flex.	M320858-019
5	Connector, 1-1/2" box	J700746
6	Elbow, 1-1/2" x 45° street (galv)	J032596
7	Clamp, with 1-1/2" pipe tap complete (galv.)	J033182
8	Signal Unit, with red plastic 30°/15° roundel	N394817
9	Lamp, 10V, 18W, S-11, CCG, SC base	J071463
	Lamp, 10V, 25W, S-11, CCG, SC base	J071574
10	*Sign, Number Tracks (Spec. "No.") if ordered	X392929
11	Sign, "Railroad Crossing" (4" Mast)	X392931-001
12	Hood	M390714
13	Background	M390713
14	U-Bolt, 5/8"	M392791
15	Nut, 5/8 Hex. Stl. Cad. Pl.	J048020
16	Washer, 5/8 Stl. Plate Cad. Pl.	J047504
17	Cap, pipe	J026104
18	Clamp, mast	M433619
19	Washer, Lock	J047772
20	Bolt, Sq. Hd. 3/4-10 x 7-1/2 Lg. **	J046748
21	Nut, Hex. Hd.	J048026
22	*Foundation Bolt, 1" x 24"	M254806
23	*Nut, 1" Hex. Stl. Cad. Pl.	J048030
24	*Washer, 1" Stl. Plate Cad. Pl.	J047509
25	*Bell	N074357
26	*Adapter, for bell	N082254
27	Arm, cross	N390676
	*Sign, "STOP ON RED SIGNAL" complete (not shown)	X451070-0309

*Optional items not incl. in assemblies A to N. Items reqd. to be ordered separately.

**When applying gate to 5 inch mast, 4 bolts 3/4"-10 x 8-1/2", J046752 must be ordered separately.

Following is a parts list for the Gate Arm Assembly. The index numbers in this list are keyed to Figure 3. Parts apply to all gates except as noted.

ITEM	DESCRIPTION	WABCO Part #
A	Gate Arm, three sections complete, with diagonal stripes of reflective red and reflective white (26 ft.)	N451070-0201
A1	Gate Arm, three sections with diagonal stripes of reflective red and reflective white sheeting 26 ft. (For repair use only)	N451070-0202
B	Gate Arm, three sections complete with diagonal stripes of reflective red and reflective white. (32 Ft.)	N451070-0207
B1	Gate Arm, three sections with diagonal stripes of reflective red and reflective white. (32 Ft) (For repair use only)	N451070-0210
1	Gate Arm, (First section only) with diagonal stripes of reflective red and reflective white (26 ft.)	N451071-3901
3	Gate Arm, (First section only) with diagonal stripes of reflective red and reflective white (32 ft.)	N451071-6203
5	Gate Arm, (Second section only) with diagonal stripes of reflective red and reflective white	N451071-3902
7	Gate Arm, (Third section only, tip) with diagonal stripes of reflective red and reflective white	N451071-3903
9	Lamp, (Arm) Assembly Complete (includes the following items) • Red Lens • Bracket (fastened to arm) • Wire, #8 M-258-30 • Connector, 3 Pin, (includes male and female end, UJ706864) • Tubing, #5 Black	N451071-3801
10	Wiring Harness (accommodates 3 lamps), 26 ft. gate	N451071-3803
	Wiring Harness (accomodates 3 lamps) 26 Ft. Gate (for repair use only)	N451071-3804
	Wiring Harness (accomodates 3 lamps), 32 Ft. gate	N451070-3806

WABCO

Parts List (continued)
Reference Figure 3

ITEM	DESCRIPTION	WABCO Part #
11	Shear Pin: 26 ft. gate 32 ft. gate	N451071-4702 N451071-4703
12	Nut, 3/8-16 Hex. aluminim	J480220
13	Pin, 1/8 x 1" Stl. Cotter T.P.	J048620
14	Support, Gate Arm Complete (includes items listed below), 26 ft. gate	N451070-0205
	Support Gate Arm Complete (includes items listed below), 32 ft. gate • Counterweight (approx. 100#) • Counterweight (approx. 20#) (3 req'd for N451070-0209) • Screw, 3/8 x 6-1/2 Sq. Stl. Cad. Pl. (N451070-0205 only) • Nut, 3/8-16 Hex. Cad. Pl. • Washer, 3/8 Stl. Lk. Cad. Pl. • Screw, 3/8 x 1-1/4 Hex. Stl. Cad. Pl. • Plate, Support • Nut, 3/8-16 Hex. Stl. Jam Cad. Pl. • Washer, 3/8 Stl. Pl. Cad. Pl. • Washer, 3/8 Stl. Lk. Cad. Pl. • Bolt, 3/8 x 1 Hex. Hd. Stl. Cad. Pl. • Screw, 8-32 x 9/16 Rd. Hd. Br. N.P. • Grommet • Screw, 10-32 x 3/8 Rd. Hd. Br. N.P. • Washer, 10 Stl. Lk. T.P. • Cable, 3-cond. #16 wire • Clamp, Cable (outside support channel) • Washer, #8 Lk. Ph. Bz. N.P. • Washer, #8 Br. Pl. N.P. • Plate, Cover • Clamp, Cable (inside support channel) • Screw, 3/8 x 8 Sq. Stl. (N451070-0209 only)	N451070-0209
15	Screw, 3-8 x 3 Hex. Stl. Cad. Pl.	J050065
16	Washer, 3/8 Stl. Pl. Cad. Pl.	J047502
17	Washer, 3/8 Stl. Lk. Cad. Pl.	J047779
18	Nut, 3/8-16 Hex. Cad. Pl.	J048009
19	Spacer (Section X-X)	M451071-1007
20	Spacer (Section Y-Y)	M451071-1008

WABCO

Parts List (continued)
Reference Figure 3

ITEM	DESCRIPTION	WABCO Part #
11	Shear Pin: 26 ft. gate	N451071-4702
	32 ft. gate	N451071-4703
12	Nut, 3/8-16 Hex. aluminim	J480220
13	Pin, 1/8 x 1" Stl. Cotter T.P.	J048620
14	Support, Gate Arm Complete (includes items listed below), 26 ft. gate	N451070-0205
	Support Gate Arm Complete (includes items listed below), 32 ft. gate	N451070-0209
	• Counterweight (approx. 100#)	
	• Counterweight (approx. 20#) (3 req'd for N451070-0209)	
	• Screw, 3/8 x 6-1/2 Sq. Stl. Cad. Pl. (N451070-0205 only)	
	• Nut, 3/8-16 Hex. Cad. Pl.	
	• Washer, 3/8 Stl. Lk. Cad. Pl.	
	• Screw, 3/8 x 1-1/4 Hex. Stl. Cad. Pl.	
	• Plate, Support	
	• Nut, 3/8-16 Hex. Stl. Jam Cad. Pl.	
	• Washer, 3/8 Stl. Pl. Cad. Pl.	
	• Washer, 3/8 Stl. Lk. Cad. Pl.	
	• Bolt, 3/8 x 1 Hex. Hd. Stl. Cad. Pl.	
	• Screw, 8-32 x 9/16 Rd. Hd. Br. N.P.	
	• Grommet	
	• Screw, 10-32 x 3/8 Rd. Hd. Br. N.P.	
	• Washer, 10 Stl. Lk. T.P.	
	• Cable, 3-cond. #16 wire	
	• Clamp, Cable (outside support channel)	
	• Washer, #8 Lk. Ph. Bz. N.P.	
	• Washer, #8 Br. Pl. N.P.	
	• Plate, Cover	
	• Clamp, Cable (inside support channel)	
	• Screw, 3/8 x 8 Sq. Stl. (N451070-0209 only)	
15	Screw, 3-8 x 3 Hex. Stl. Cad. Pl.	J050065
16	Washer, 3/8 Stl. Pl. Cad. Pl.	J047502
17	Washer, 3/8 Stl. Lk. Cad. Pl.	J047779
18	Nut, 3/8-16 Hex. Cad. Pl.	J048009
19	Spacer (Section X-X)	M451071-1007
20	Spacer (Section Y-Y)	M451071-1008

Parts List Continued

Reference Figure 3

ITEM	DESCRIPTION	WABCO Part #
21	Screw, 3/8 x 2-3/4 Hex. Stl. Cad. Pl.	J050064
22	Nut, 8-32 Hex. Br. N.P.	J048198
23	Clamp, Cable (on Arm)	J700586
24	Washer, #8 Lk. Ph. Bz. N.P.	J047709
25	Washer, #8 Br. Pl. N.P.	J475052
26	Screw, 8-32 x 9/16 Rd. Hd. Br. N.P.	J051635

WABCO

The following parts list for the Gate Mechanism is keyed to Figure 4.

ITEM	DESCRIPTION	PART NO.
	Mechanism, Crossing Gate	N451070-0101
1	Cover, Mechanism	N451071-3602
2	Washer, Flat, 1/4	J047501
3	Washer, Lock,1/4 T.P.	J047775
4	Screw, Hex. Hd.,1/4-20 x 1-1/4 Lg.	J050021
5	Spacer	M451011-0511
6	Case, Mechanism	R451071-1101
7	Crip, Cable, 45 degree	J712060
8	Ventilator	N070109
9	Ring, Retaining	J792214
10	Bearing	J066384
11	Clamp	M451071-0801
12	Ring, Retaining, Stl. 3/16 Sq.	J079768
13	Screw, Hex. Hd.,1/4-20 x 3/4 Lg.	J050016
14	Gear, Sector	M451071-1601
15	Seal	J792215
16	Gasket	M451071-3005
17	Sleeve	M451071-0703
18	Washer, Plain 7/8"	J047508
19	Washer, Lock 7/8"	J047773
20	Nut, Hex. 7/8-9	J048029
22	Shaft, Gate	M451071-2101
23	Spacer	M451071-1701
24	Screw, Mach., Rd. Hd. No. 10-32 x 3/8 Lg.	J052564
25	Washer, Lock No. 10	J047733
26	Screw, Mach. Rd. Hd. No. 10-32 x 1-1/2 Lg.	J052569
27	Washer, Plain, No. 10	J475077
28	Nut, Hex., No. 10-32	J048172
29	Screw, Mach., Rd. Hd., No. 10-32 x 1/4 Lg.	J052563
30	Gear Assembly	N451071-1801
31	Gear Assembly	N451071-1802
32	Screw, Hex. Hd., 3/8 x 3/4 Hex. Cap	J050051
33	Bumper Stop	J751287
34	Clamp, Mast	M433619
35	Washer, Lock	J047772
36	Bolt, Sq. Hd., 3/4-10 x 7-1/2 Lg.	J046748
37	Washer, Lock, 5/16	J047526
38	Screw, Hex. Hd., 5/16 x 1-1/4 Lg.	J050040
39	Plate, Back-up	M451071-3004
40	Motor	N451071-3101
41	Grommet	J751118
42	Resistor	J720261

WABCO

The following parts list for the Gate Mechanism is keyed to Figure 4.

ITEM	DESCRIPTION	PART NO.
	Mechanism, Crossing Gate	N451070-0101
1	Cover, Mechanism	N451071-3602
2	Washer, Flat, 1/4	J047501
3	Washer, Lock,1/4 T.P.	J047775
4	Screw, Hex. Hd.,1/4-20 x 1-1/4 Lg.	J050021
5	Spacer	M451011-0511
6	Case, Mechanism	R451071-1101
7	Crip, Cable, 45 degree	J712060
8	Ventilator	N070109
9	Ring, Retaining	J792214
10	Bearing	J066384
11	Clamp	M451071-0801
12	Ring, Retaining, Stl. 3/16 Sq.	J079768
13	Screw, Hex. Hd.,1/4-20 x 3/4 Lg.	J050016
14	Gear, Sector	M451071-1601
15	Seal	J792215
16	Gasket	M451071-3005
17	Sleeve	M451071-0703
18	Washer, Plain 7/8"	J047508
19	Washer, Lock 7/8"	J047773
20	Nut, Hex. 7/8-9	J048029
22	Shaft, Gate	M451071-2101
23	Spacer	M451071-1701
24	Screw, Mach., Rd. Hd. No. 10-32 x 3/8 Lg.	J052564
25	Washer, Lock No. 10	J047733
26	Screw, Mach. Rd. Hd. No. 10-32 x 1-1/2 Lg.	J052569
27	Washer, Plain, No. 10	J475077
28	Nut, Hex., No. 10-32	J048172
29	Screw, Mach., Rd. Hd., No. 10-32 x 1/4 Lg.	J052563
30	Gear Assembly	N451071-1801
31	Gear Assembly	N451071-1802
32	Screw, Hex. Hd., 3/8 x 3/4 Hex. Cap	J050051
33	Bumper Stop	J751287
34	Clamp, Mast	M433619
35	Washer, Lock	J047772
36	Bolt, Sq. Hd., 3/4-10 x 7-1/2 Lg.	J046748
37	Washer, Lock, 5/16	J047526
38	Screw, Hex. Hd., 5/16 x 1-1/4 Lg.	J050040
39	Plate, Back-up	M451071-3004
40	Motor	N451071-3101
41	Grommet	J751118
42	Resistor	J720261

ITEM	DESCRIPTION	PART NO.
43	Controller, Circuit	N451071-2501
44	Board, Terminal	M451071-2801
45	Bracket, Relay	M451071-5101
46	Relay, Motor Control	J726131
47	Bearing, Thrust	J792216
48	Housing, Mechanism	M451071-0501
49	Ring, Retainer	J790835
50	Shaft, Gear	M451071-1703
51	Shield	M451071-2701
52	Screw, Hex. Hd. 1/4 x 3/8 Lg.	J050011
53	Hold Clear	J705032
54	Screw, Hex. Hd., 1/2-13 x 4-1/2 Lg.	J500025
55	Washer, Lock 1/2"	J047783
56	Nut, Hex. Jam, 1/2-13	J048016
57	Spacer, 3/8 Stl.	M451071-2702
58	Screw, Hex. Hd., 1/2-13 x 1 Lg.	J050088
61	Connector, Box, 1-1/2"	J070972
62	Nut, Conduit, 1-1/2"	J048417
63	Screw, Cap, 3/8 x 2-1/4 Lg.	J050272
65	Resistor, Snub	J720262
66	Follower, Cam (contact - 1)	M451011-1702
67	Spring, Contact (space - 1)	N451011-1509
68	Spring, Contact (space - 1)	N451011-6301
69	Screw, Mach., No. 8-32 x 3/8 Lg., Fil. Hd.	J052255
70	Plate, Reinf.	M451011-6306
71	Follower, Cam (contact - 3, 4, 5, 6, and 7)	M213089
72	Spring, Contact (space - 3, 4, and 5)	N451011-1501
73	Washer, Lock	M451011-3501
74	Washer, Insulating	M451011-3402
75	Bushing, Insulating	M451011-3401
76	Washer	J047818
77	Nut, Hex. No. 14-24, Brass	M029103
78	Post, Terminal	M130200
79	Nut	M029101
80	Nut	M031670
81	Spring, Contact (space - 3, 4, and 5)	N451011-1503
82	Screw, Fil. Hd.	J052301
83	Washer, Lock	J047669
84	Spring, Contact (space - 6 and 7)	N451011-1505
85	Spring, Contact (space - 6 and 7)	N451011-1507
87	Gasket	J470033
88	Screw, 4 x 1/4 Pan Hd. S.	J507297-0104
89	Screw, 10 x 3/8 Soc. Hd. Cap	J050244

WABCO

ITEM	DESCRIPTION	PART NO.
91	Nut, 1/2 Conduit Lk.	J048414
92	Clamp, Mast	M451071-4701
93	Springs, Armature Release	J680182
94	Spacer	M451071-5102
95	Cover, Relay	J726132
96	Washer, 8 Stl. Lk. T.P.	J047681
97	Screw, 8 x 5/8 Rd. Hd. T.P.	J052602
98	Washer, 8 Stl. Pl. T.P.	J047745
99	Connector Strap	M047290-8064
100	Connector Strap	M120343-8064
101	Cam Assembly Complete	N451011-6401
102	. Cam, Adjustable	M451011-6501
103	. Cam, Fixed	M451011-6502
104	. Arm, Rocker	M451011-1801
105	. Washer	M038448
106	. Spring	M451011-1901
107	. Pin, 1/8 x 7/8 Roll	J487025
108	. Screw, 1/4-20 x 5/8 Socket Hd.	J525300
109	Washer, 3/8 Stl. Lk. CP.	J047779
110	Spacer, Cam	M451071-5301
111	Washer	M041210
112	Clamp, Harness	J701012
113	Clamp, Cable	J700639
114	Bumper Stop Assembly complete	N451071-5709
115	Hasp	M289060
116	Pin	M209199
117	Nut	M267552
118	Nut	M046641
119	Bolt, eye	M395383
120	Pin	M398247-001
121	Bolt, U	M103381
122	Nut, 1/2-13 Sq.	J048240
123	Nut, 1/2-13 Hex. CP.	J048013
124	Bolt	M105877
125	Washer, 3/8 Lk.	J047768
126	Diode and Fuse Assembly	N451011-7101
	Diode Only - 1N1184R	J723995
	Fuse Only - 15 Amp. SLO-BLO	J710129

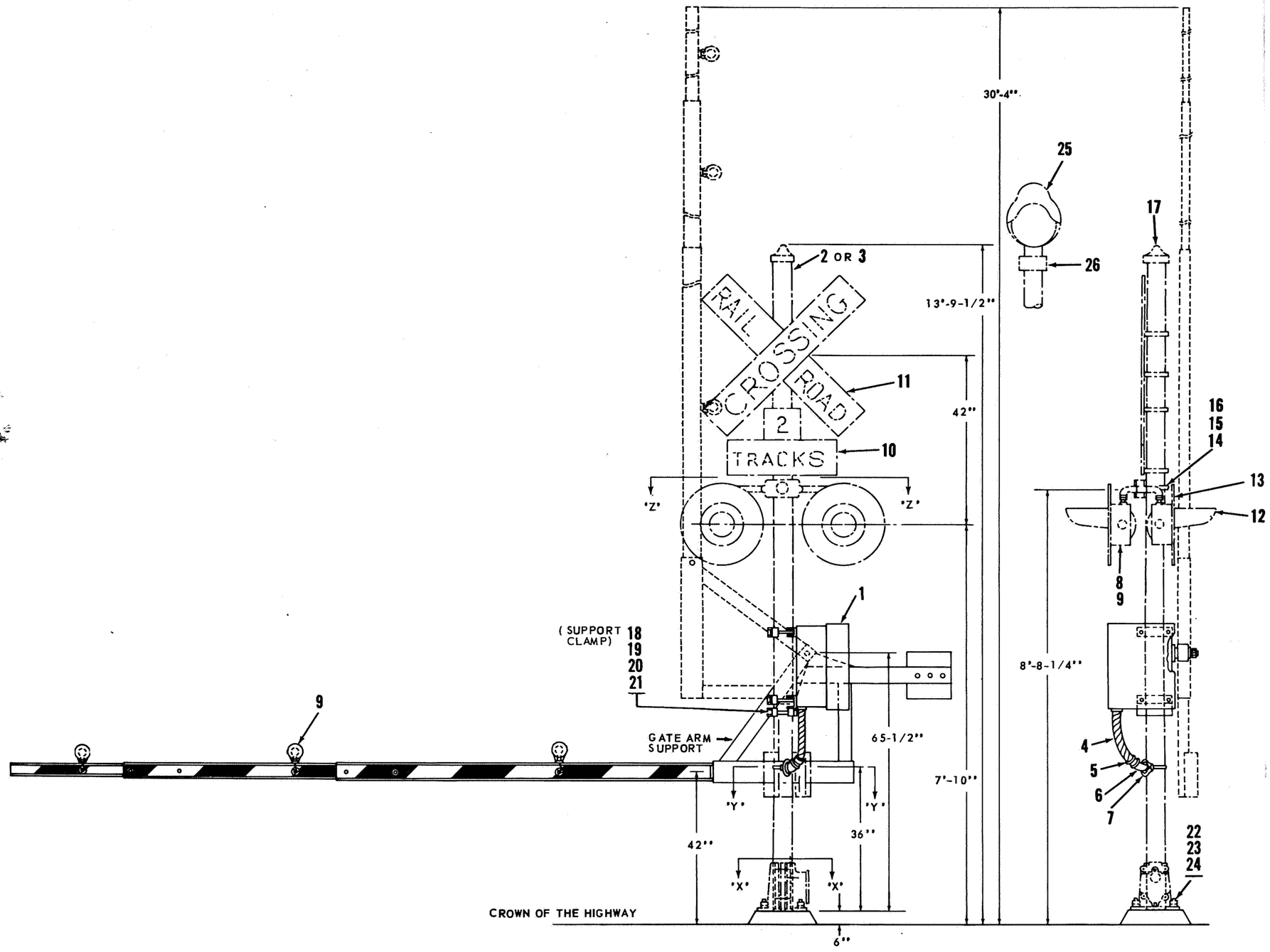

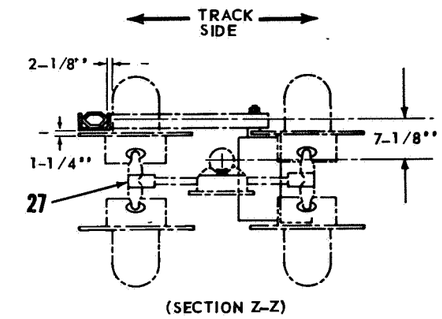

Figure 2A

NOTE: – BASE DIMENSIONS VARY WITH APPLICATION SEE PARTS LIST

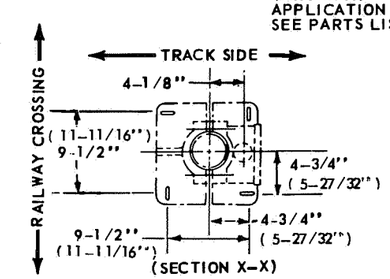

Figure 2B

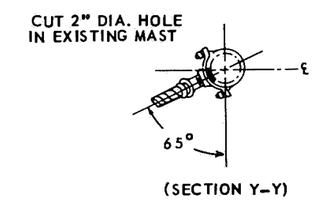

Figure 2C

Figure 2. AL-70 Crossing Gate Assembly Parts Locations

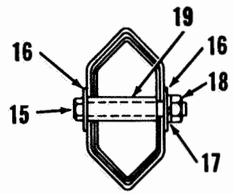

SECTION 'X-X'

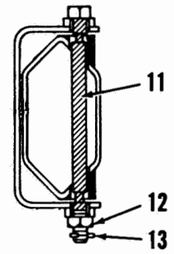

SECTION 'W-W'

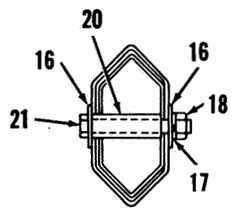

SECTION 'Y-Y'

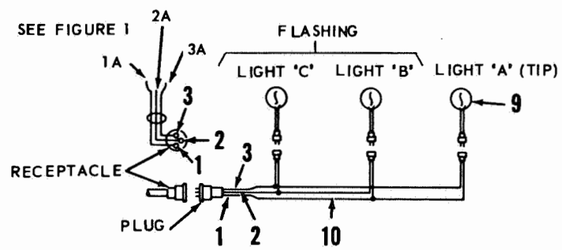

GATE LAMP CIRCUIT

Figure 3B

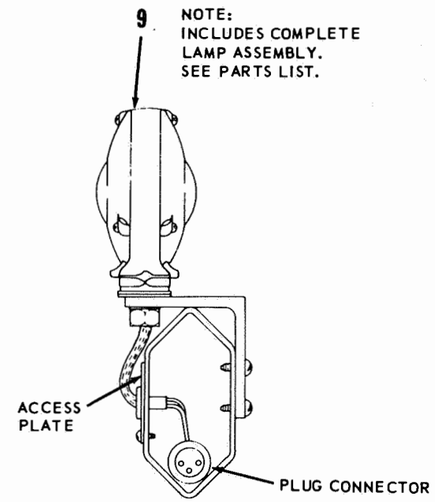

Figure 3C

TABLE 1. ARM LENGTH TABULATION (See Figure 3A)

TOTAL ARM LENGTH	'A' LENGTH	'B' LENGTH	'C' AMOUNT TO BE CUT OFF 3RD SECTION
32'	8' 4-5/8"	8' 4-5/8"	
31'	8' 4-5/8"	7' 4-5/8"	
30'	8' 4-5/8"	6' 4-5/8"	
29'	8' 4-5/8"	5' 4-5/8"	
28'	7' 4-5/8"	5' 4-5/8"	
27'	6' 4-5/8"	5' 4-5/8"	
26'	8' 4-5/8"	8' 4-5/8"	
25'	8' 4-5/8"	7' 4-5/8"	
24'	8' 4-5/8"	6' 4-5/8"	
23'	8' 4-5/8"	5' 4-5/8"	
22'	7' 4-5/8"	5' 4-5/8"	
21'	6' 4-5/8"	5' 4-5/8"	
20'	5' 4-5/8"	5' 4-5/8"	CUT 1 FT. OFF 3RD SECTION ONLY.
19'	4' 4-5/8"	5' 4-5/8"	CUT 2 FT. OFF 3RD SECTION ONLY.
18'	3' 4-5/8"	5' 4-5/8"	CUT 3 FT. OFF 3RD SECTION ONLY.
17'	2' 4-5/8"	5' 4-5/8"	CUT 4 FT. OFF 3RD SECTION ONLY.
16'	2' 4-5/8"	4' 4-5/8"	CUT 4 FT. OFF 3RD SECTION AND 1 FT. OFF 2RD SECTION AS SHOWN IN FIGURE 3A.

TABLE 2. COUNTERWEIGHT TABULATION

ARM LENGTH	COUNTER-WEIGHT	'A' COUNTER-WEIGHT POSITION	0° TORQUE	90° TORQUE
32'	160#	*33-1/2"	95FT#	240FT#
31'	160#	*33-1/2"	75FT#	240FT#
30'	160#	*33-1/2"	55FT#	240FT#
29'	160#	30-3/4"	75FT#	240FT#
28'	160#	30-3/4"	55FT#	240FT#
27'	160#	28-3/4"	75FT#	240FT#
26'	120#	*33-1/2"	75FT#	195FT#
25'	120#	*33-1/2"	55FT#	195FT#
24'	120#	30-3/4"	65FT#	195FT#
23'	120#	30-3/4"	50FT#	195FT#
22'	120#	28-3/4"	60FT#	195FT#
21'	120#	28-3/4"	50FT#	195FT#
20'	100#	30-3/4"	50FT#	185FT#
19'	100#	28-3/4"	65FT#	185FT#
18'	100#	28-3/4"	50FT#	185FT#
17'	100#	25-1/4"	55FT#	185FT#
16'	100#	22-1/2"	50FT#	185FT#

* Counterweight Extends Beyond Support

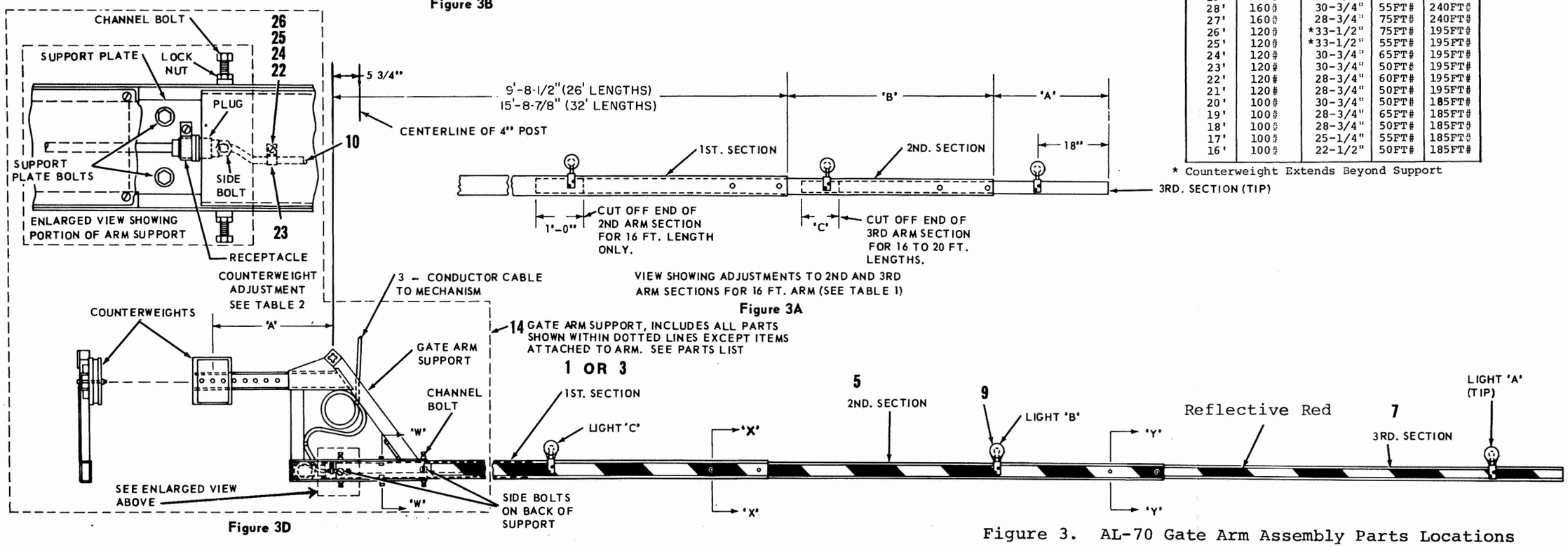

Figure 3D

Figure 3A

Figure 3. AL-70 Gate Arm Assembly Parts Locations

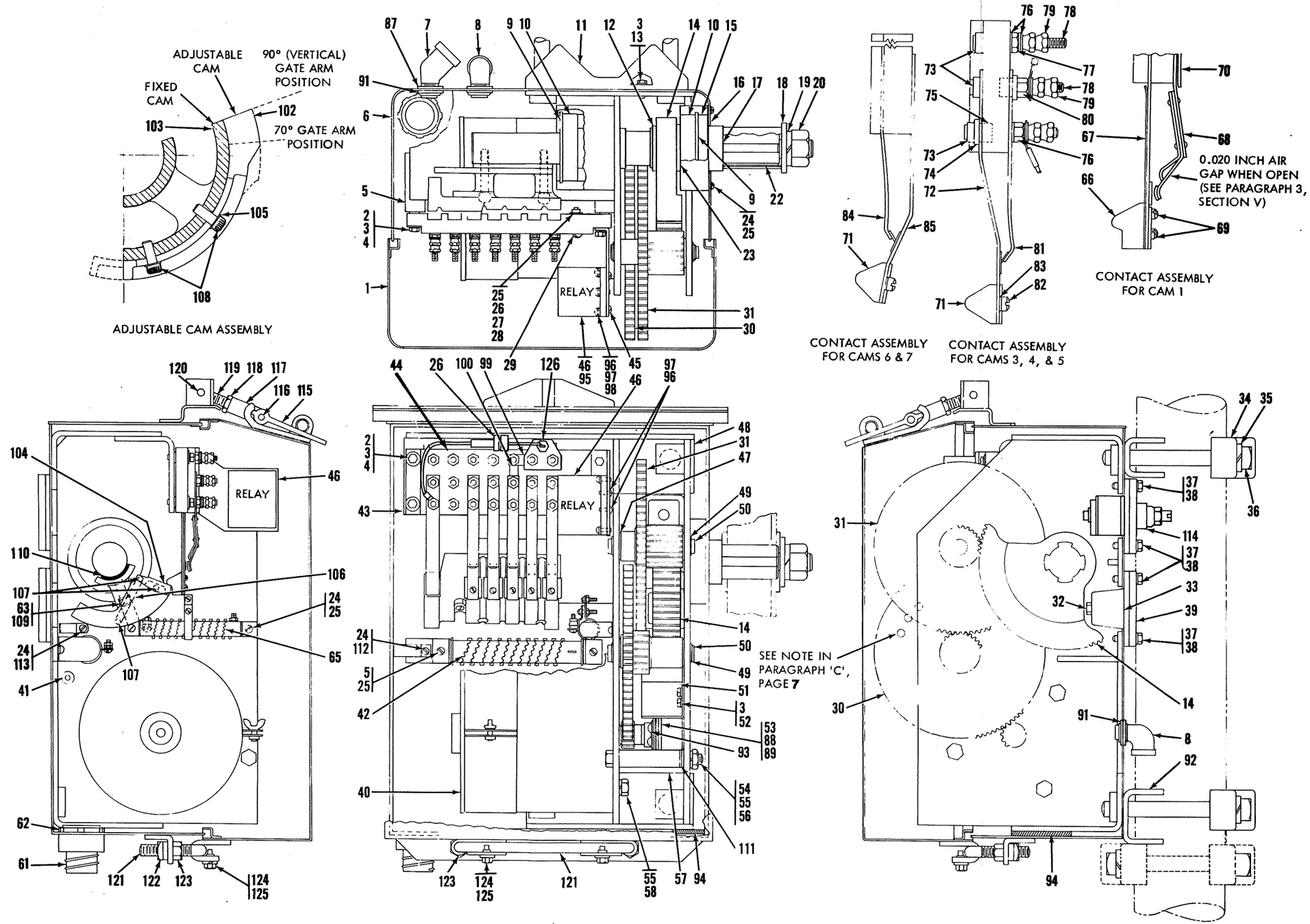

Figure 4. AL-70 Crossing Gate Mechanism

WABCO

SERVICE MANUAL 5900-B

COMBINED BASE AND JUNCTION BOXES
(FOR 4" AND 5" PIPE)

* * * * * * * * *

PARTS LIST

This service manual provides parts lists for Combined Base and Junction Boxes with 12 or 24 terminals for 4" pipes and 24 or 48 terminals for 5" pipes. Included in this Parts List are complete tabulations of the combined base and junction boxes being covered and detailed parts for these units.

The combined base and junction box tabulations contain an alpha reference, piece number, and description. The alpha "Ref." for the piece number shown in the combined base and junction box tabulations is referenced in the detail parts lists for determining the next higher assembly.

Information pertaining to the use of the detail parts lists is provided at the beginning of each list.

PRINTED IN U.S.A. A0.70-500-1478.1

WESTINGHOUSE AIR BRAKE COMPANY
SIGNAL & COMMUNICATIONS DIVISION
Swissvale Post Office, Pittsburgh, Pa. 15218
An American-Standard Company

May, 1970

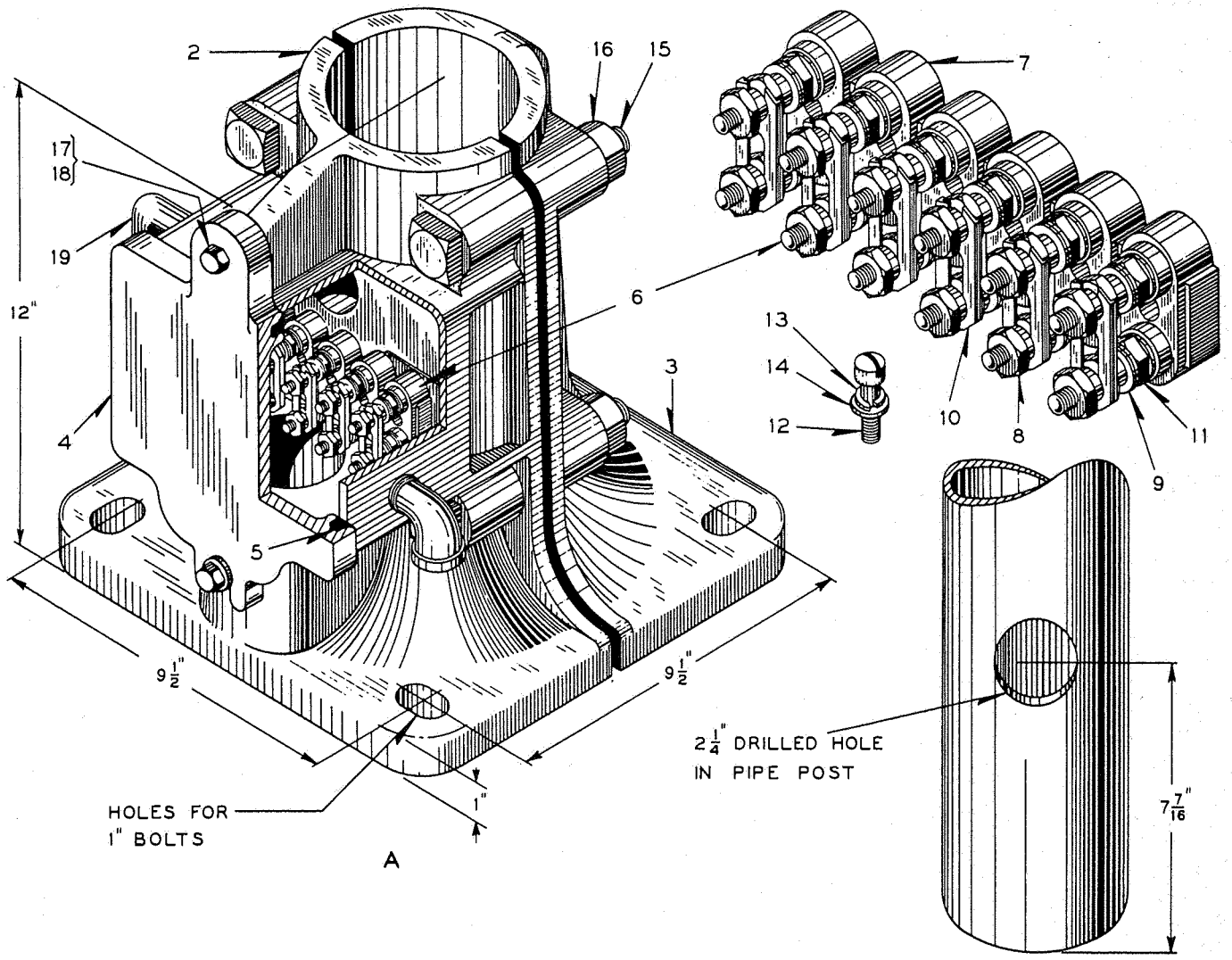

Figure 1. Combined Base and Junction Box For 4" Pipe For Ground Signals

COMBINED BASE AND JUNCTION BOX FOR 4" PIPE FOR GROUND SIGNALS (12- OR 24- TERMINAL)

Combined Base and Junction Box Tabulation

REF.	PIECE	DESCRIPTION	DRAWING
A	UN215037	Combined Base and Junction Box Complete with one Terminal Block Ref. 6 (12 terminals). For 4" pipe post. (Includes 1-2, and 1-3, 4-15, 4-16).	C6634-12
Aa	UN215039	Combined Base and Junction Box Complete with two Terminal Blocks Ref. 6 (24 terminals). For 4" pipe post. (Includes 2-2, 4-15, 4-16)	C6634-12

Detailed Parts List

Indented item descriptions with numeric references in the "Used On" column refer to Figure 1. Other references refer to Combined Base and Junction Box Tabulation.

Order By Reference, Piece, and Abbreviated Description

REF.	PIECE	DESCRIPTION	DRAWING	USED ON
2	UM194141	. Half Base with Junction Box Only for 4" pipe	C6634-12	A, Aa
3	UM191265	. Half Base Only, for 4" pipe	C6634-11	A
4	UN219673	. Junction Box Cover Complete	C6634-17	A, Aa
4a	UM103465	. . Junction Box Cover Only	C6634-17	4
5	UA67069	. . Gasket, 3/8" sq. 2'-1" long		4
6	UN178389	. Terminal Block Complete	9968-1075	A, Aa
7	UJ77873	. . Terminal Block Only.	9968-1074	6
8	UM29101	. . Nut	8109-193	6
9	UJ47818	. . Washer	7828-139	6
10	UM56224	. . Terminal Connector	8064-348	6
11	UM29103	. . Nut	8109-194	6
12	UJ52298	. Machine Screw, No. 10 - 32 x 3/4" fil. hd. steel (Tin Pl.)		A, Aa
13	UJ47733	. Lock Washer, No. 10 plain steel (Tin Pl.)		A, Aa
14	UM1564	. Washer	8112-1	A, Aa
15	UJ46740	. Bolt, 3/4" x 5-1/2" sq. hd. (Cad. Pl.)		A, Aa
16	UJ48026	. Hex. Nut, 3/4" (Cad. Pl.)		A, Aa
17	UJ50092	. Cap Screw, 1/2" x 13"x 1-1/2" hex. hd. steel (Cad. Pl.) for attaching Terminal Block.		A, Aa
18	UJ47503	. Plate Washer 1/2" steel (Cad. Pl.)		A, Aa
19	UN70109	. Ventilator	7318-57	A, Aa

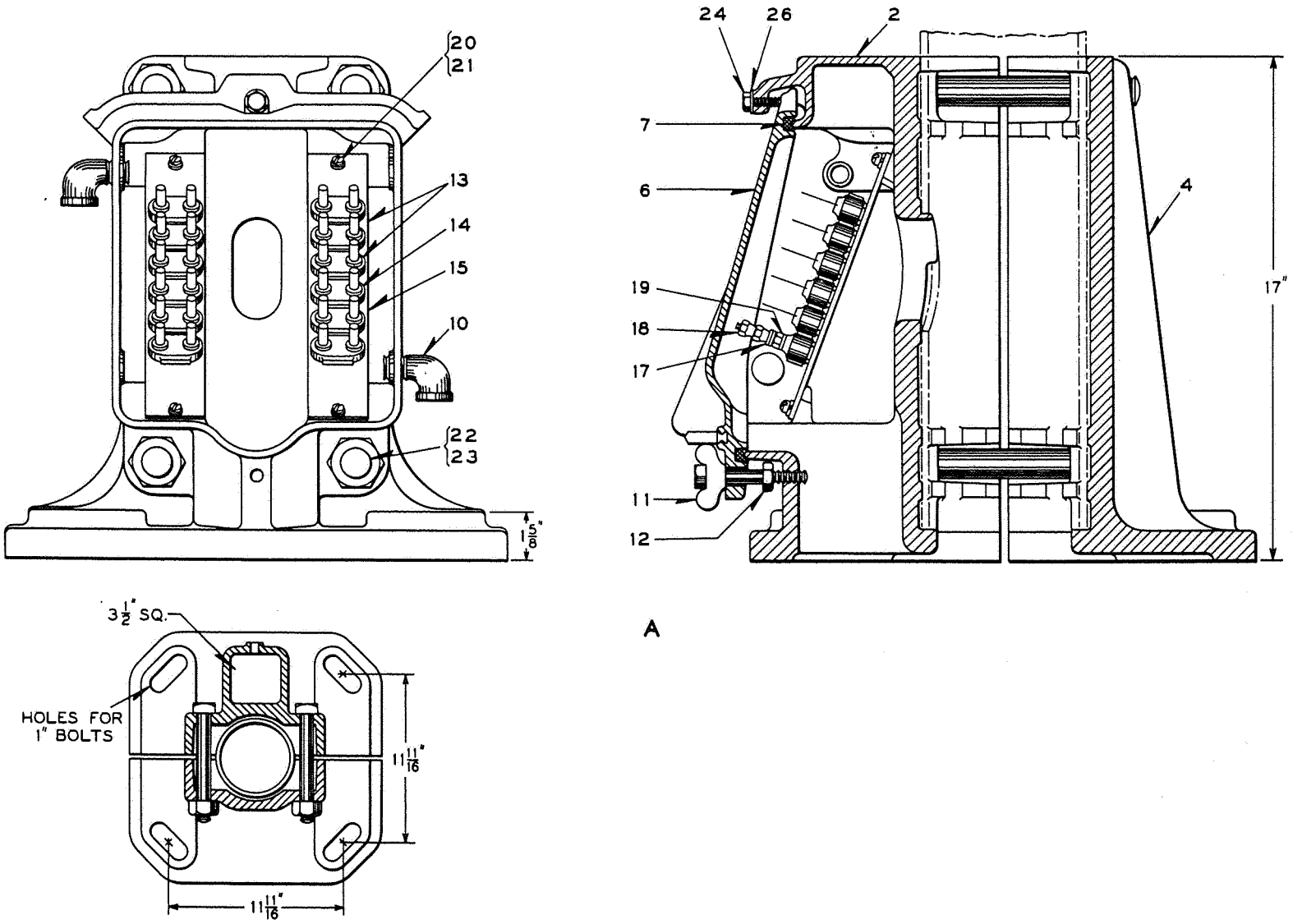

Figure 2A. Combined Base and Junction Box For 5" Pipe For Ground and Bridge Signals

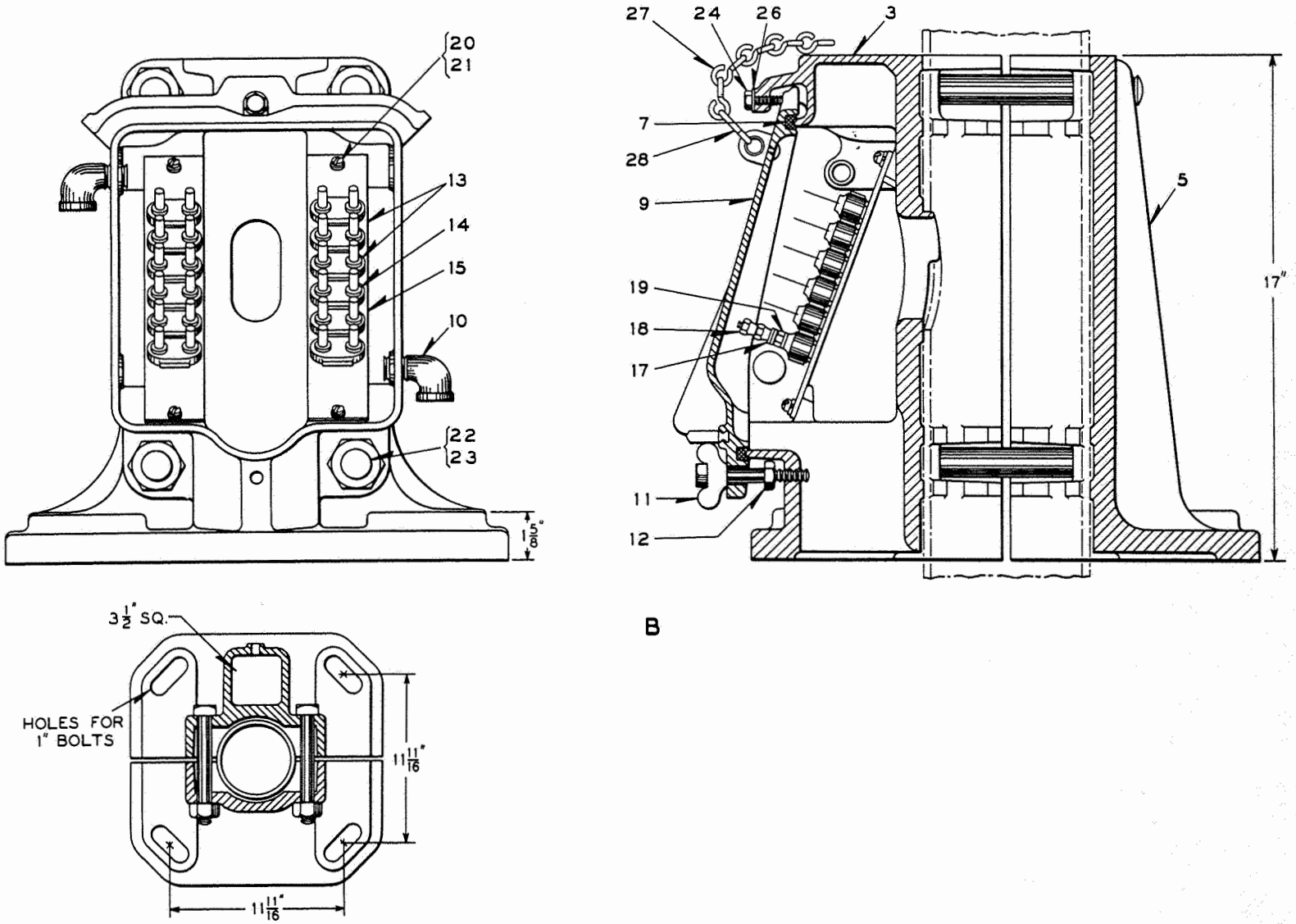

Figure 2B. Combined Base and Junction Box For 5" Pipe For Ground and Bridge Signals

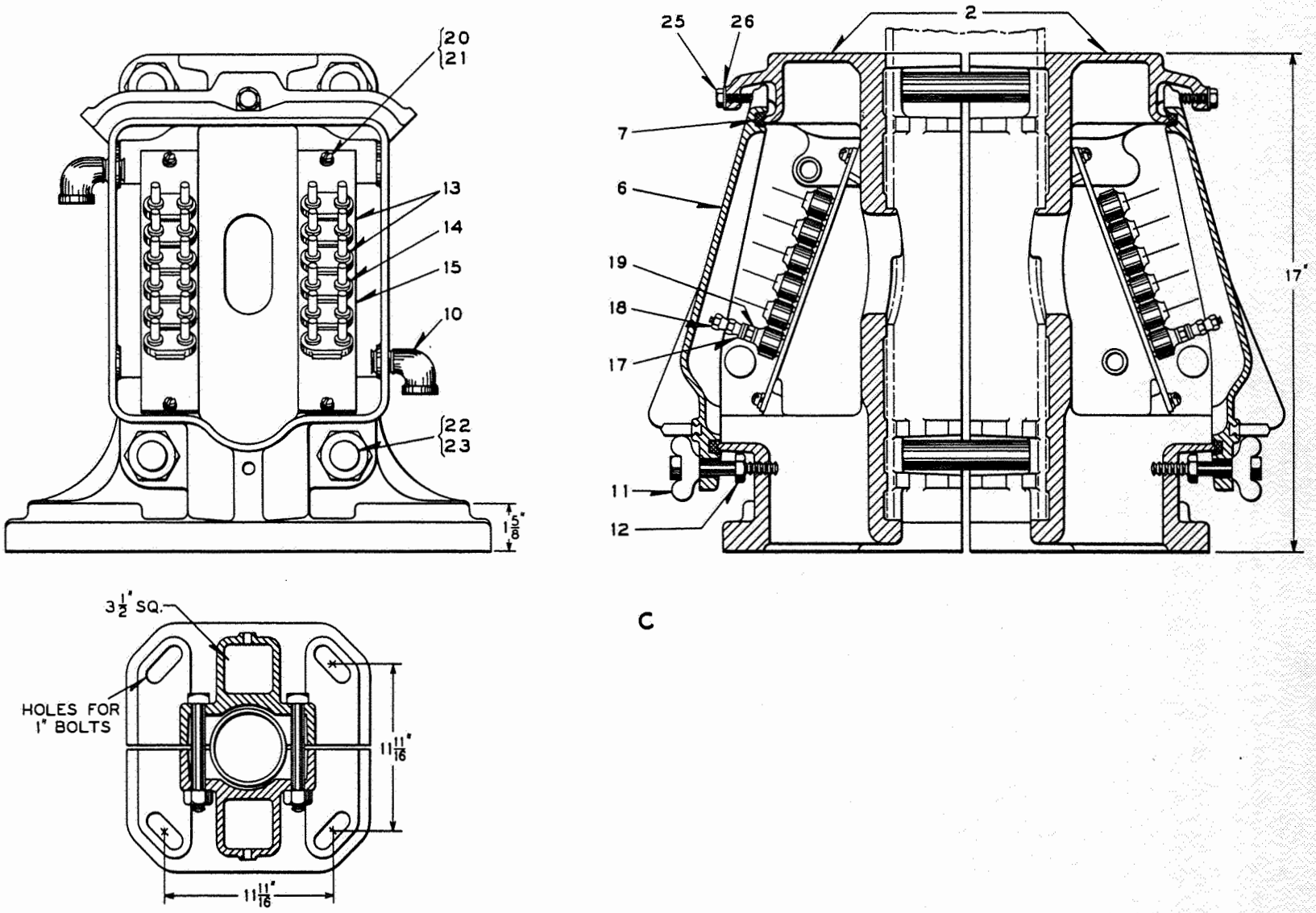

Figure 2C. Combined Base and Junction Box For 5" Pipe For Ground and Bridge Signals

COMBINED BASE AND JUNCTION BOX FOR 5" PIPE FOR GROUND AND BRIDGE SIGNALS (24- OR 48- TERMINAL)

Combined Base and Junction Box Tabulation

REF.	PIECE	DESCRIPTION	DRAWING
A	UN221966	Combined Base and Junction Box complete with two Terminal Blocks, Ref. 13 (24 terminals). For 5" pipe post for ground or bridge mounting, all signal units above base. (Includes clamping bolts).	C6634-25
B	UN262056	Combined Base and Junction Box complete with two Terminal Blocks, Ref. 13 (24 terminals). For 5" pipe post for bridge mounting, with suspended signal units. (Includes clamping bolts)	C6634-32
Ba	UN304789	Combined Base and Junction Box complete with two Terminal Blocks, Ref. 13 (24 terminals). For 5" pipe post for bridge mounting, with suspended signal units. (With 2" pipe tapped holes on both sides of Junction Box). (Includes clamping bolts)	C6634-32
C	UN214857	Combined Base and Two Junction Boxes complete with four Terminal Blocks, Ref. 13 (48 terminals). For 5" pipe post for ground or bridge mounting, all signal units above base. (Includes clamping bolts)	C6634-24

Detailed Parts List

Indented item descriptions with numeric references in the "Used On" column refer to Figures 2A, 2B, and 2C. Other references refer to Combined Base and Junction Box Tabulation.

Order By Reference, Piece, and Abbreviated Description

REF.	PIECE	DESCRIPTION	DRAWING	USED ON
2	UM214856	. Half Base with Junction Box	C6634-23	A, C
3	UM230688	. Half Base with Junction Box	C6634-23	B
3a	UM304788	. Half Base with Junction Box	C6634-28	Ba
4	UM107059	. Half Base	C6634-19	A
5	UM238728	. Half Base	C6634-19	B, Ba
6	UN228226	. Cover Complete	C6634-21	A, C
6a	UM107061	. . Cover Only	C6634-21	6
7	UA67069	. . Gasket, (Orders should specify length desired) .		6, 9
9	UN230709	. Cover Complete with staple (Does not include gasket)	C6634-21	B, Ba
10	UN70109	. Ventilator	7318-57	A, B, Ba C

REF.	PIECE	DESCRIPTION	DRAWING	USED ON
11	UN107065	. Thumb Screw	8331-83	A, B, Ba C
12	UJ48016	. Hex. Jam Nut, 1/2" steel (Cad. Pl.)		A, B, Ba C
13	UN108439	. Terminal Board Complete	C6634-22	A, B, Ba C
14	UJ77873	. . Terminal Board Only.	9968-1074	13
15	UM220175	. . Mounting Plate	C6634-27	13
16	UJ52466	. . Screw, No. 10 - 32 x 9/16" fil. hd. steel (Tin Pl.). For attaching Terminal Board to Mounting Plate (Not Shown)		13
17	UJ47818	. . Washer	7828-139	13
18	UM29101	. . Nut	8109-193	13
19	UM29103	. . Nut	8109-194	13
20	UJ52505	. Screw, 1/4" x 20 x 5/8" rd. hd. steel (Tin Pl.) . .		A, B, Ba, C
21	UJ47775	. Lock Washer, 1/4" steel (Tin Pl.)		A, B, Ba, C
22	UJ46799	. Bolt, 1" - 8 x 7-1/2" sq. hd. steel (Cad. Pl.). . . .		A, B, Ba, C
23	UJ48030	. Hex. Nut, 1" (Cad. Pl.)		A, B, Ba, C
24	UJ50053	. Cap Screw, 3/8" x 1" hex. hd. (Cad. Pl.)		A, B, Ba
25	UJ50052	. Cap Screw, 3/8" x 7/8" hex. hd. (Cad. Pl.).		C
26*	UM62222	. Washer, .0375" thick	7826-180	A, B, Ba, C
26a*	UM33010	. Washer, 1/16" thick	7826-89	A, B, Ba, C
27	UA61109	. Single Jack Chain No. 8, 40 links		B, Ba
28	UJ56179	. S Hook, 1"		B, Ba

* Use as required to obtain desired compression

WABCO

SERVICE MANUAL 5900 -D

JUNCTION BOXES FOR MOUNTING ON SIDE
OF 3" TO 8" PIPE POST

* * * * * * * * *

PARTS LIST

This service manual provides a parts list for 24-terminal Junction Boxes for Mounting On Side of 3" to 8" Pipe Post. Included in this Parts List is a complete tabulation of the junction boxes being covered and detail parts for these junction boxes.

The junction box tabulation contains an alpha reference, piece number, and description. The alpha "Ref." for the piece number shown in the junction box tabulation is referenced in the detail parts list for determining the next higher assembly.

Information pertaining to the use of the detail parts list is provided at the beginning of the list.

PRINTED IN U.S.A. A0. 70-500-1480.1

WESTINGHOUSE AIR BRAKE COMPANY
SIGNAL & COMMUNICATIONS DIVISION
Swissvale Post Office, Pittsburgh, Pa. 15218
An American-Standard Company

May, 1970

WABCO

REF.	PIECE	DESCRIPTION	DRAWING	USED ON
17a	UM183410	U-Bolt, for 3-1/2" pipe	8782-194	A
17b	UM118554	U-Bolt, for 4" pipe	8782-99	A
17c	UM52795	U-Bolt, for 5" pipe	8782-99	A
17d	UN214445	Hinged U-Bolt, for 6" pipe	8782-218	A
18	UM216946	U-Bolt, for 4" or 5" pipe	8782-99	B
18a	UM109746	U-Bolt, for 6" pipe	8782-37	B
18b	UM215117	U-Bolt, for 8" pipe	8782-220	B
19	UJ48020	Hex. Nut, 5/8" steel (Cad. Pl.)		A, B

WABCO

REF.	PIECE	DESCRIPTION	DRAWING	USED ON
11	UN379736	. Terminal Block Complete	D66314-10	A, Aa
12	UJ77873	. . Terminal Block Only	9968-1074	11
13	UM379735	. . Mounting Plate	D66314-10	11
14	UJ52466	. . Screw, No. 10 - 32 x 9/16" fil. hd. steel (Tin Pl.) for attaching Terminal Block (Not Shown).		11
15	UJ47818	. . Washer	7828-139	11
16	UM29101	. . Nut	8109-193	11
17	UM29103	. . Nut	8109-194	11
18	UJ52204	. Screw, 1/4" x 20 x 5/8" fil. hd. steel (Tin Pl.) .		A, Aa
19	UJ47775	. Lock Washer, 1/4" steel (Tin Pl.)		A, Aa
20	UA67035	. Gasket, 1/2" sq. x 14-1/2" long		A, Aa
21	UJ32907	. 1" Cast Iron Pipe Plug (Not Shown)		A, Aa
22	UM104294	Bracket	10914-944	A, Aa
23	UM104873	Hook Bolt	7813-390	A, Aa
24	UJ48026	Hex. Nut, 3/4" (Cad. Pl.)		A, Aa
25	UM106144	Socket Base, for 6" pipe	C6782-16	A, Aa

WABCO

SERVICE MANUAL 5900-C

JUNCTION BOX FOR MOUNTING ON SOCKET BASES
FOR 6" PIPE

* * * * * * * * * *

PARTS LIST

This service manual provides a parts list for Junction Boxes which mount on socket bases which accommodate 6" pipe. Included in this Parts List is a complete tabulation of the junction boxes being covered and detailed parts for these units.

The junction box tabulation contains an alpha reference, piece number, and description. The alpha "Ref." for the piece number shown in the junction box tabulation is referenced in the detail parts list for determining the next higher assembly.

Information pertaining to the use of the detail parts list is provided at the beginning of the list.

PRINTED IN U.S.A. A0. 70-500-1479.1

WESTINGHOUSE AIR BRAKE COMPANY
SIGNAL & COMMUNICATIONS DIVISION
Swissvale Post Office, Pittsburgh, Pa. 15218
An American-Standard Company

May, 1970

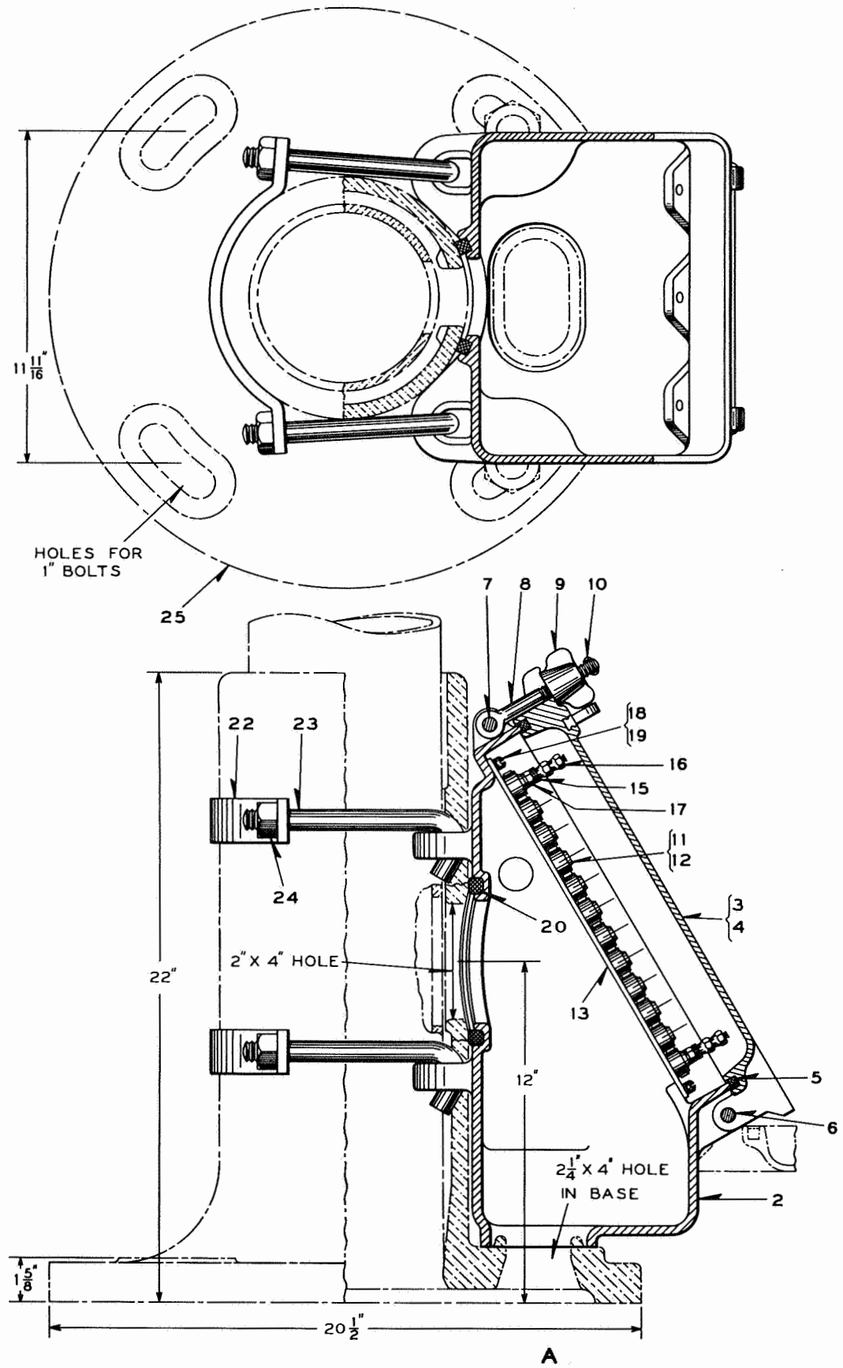

Figure 1. Junction Box For Mounting On Socket Bases For 6" Pipe

JUNCTION BOX FOR MOUNTING ON SOCKET BASES FOR 6" PIPE

Junction Box Tabulation

Socket base, Ref. 25, is not included. It must be ordered sepatately, if desired.

REF.	PIECE	DESCRIPTION	DRAWING
A	UO384947	Junction Box Complete with one Terminal Block (24 terminals). For mounting on socket base for 6" pipe. Includes fittings, Refs. 22 thru 24 inclusive but does not include socket base, Ref. 25	D66316-8
Aa	UO384946	Junction Box Complete with two Terminal Blocks (48 terminals). For mounting on socket base for 6" pipe. Includes fittings, Refs. 22 thru 24 inclusive but does not include socket base, Ref. 25	D66316-8
Ab	UN212958	Junction Box Complete with one Terminal Block (24 terminals). For mounting on socket base for 6" pipe. Does not include fittings and socket base, Refs. 22 thru 25 inclusive	D66316-8
Ac	UN104478	Junction Box Complete with two Terminal Blocks (48 terminals). For mounting on socket base for 6" pipe. Does not include fittings and socket base, Refs. 22 thru 25 inclusive	D66316-8

Detail Parts List

Indented item descriptions with numeric references in the "Used On" column refer to Figure 1. Other references refer to Junction Box Tabulation.

Order By Reference, Piece, and Abbreviated Description

REF.	PIECE	DESCRIPTION	DRAWING	USED ON
2	UM104291	. Box	C9181-55	A, Aa
3	UN269746	. Cover Complete	C9181-56	A, Aa
4	UM104292	. . Cover Only.	C9181-56	3
5	UA67069	. . Gasket, 3/8" sq. 4' - 2-5/8" long		3
6	UM134534	. Hinge Pin	B10213-1	A, Aa
7	UM177457	. Pin	B10213-1	A, Aa
8	UM104404	. Eye Bolt	8034-233	A, Aa
9	UM210979	. Wing Nut	8331-72	A, Aa
10	UJ49433	. Rivet, 3/16" x 5/8" rd. hd.	D66314-10	A, Aa

WABCO

SERVICE MANUAL 5909

GATE ARM ADAPTOR ASSEMBLY FOR MODEL "GS" CROSSING GATE MECHANISM

(N451071-6001)

* * * * * * * * *

INSTALLATION AND MAINTENANCE

I. GENERAL DESCRIPTION

The WABCO Gate Arm Adaptor Assembly (N451071-6001) is designed to provide a means for applying the WABCO Light Weight Aluminum Gate Arm to the Model "GS" Crossing Gate Mechanism.

This adaptor assembly can be applied to the existing Model "GS" gate arm bracket with four bolts.

A bolt shearing feature is provided on the adaptor channel which is designed to release the arm from the channel if the gate arm is hit with sufficient force by a motor vehicle.

The channel section of the gate arm adaptor includes: six channel bolts, one shear bolt, and a three pin connector attached to a three conductor cable. See Figure 1.

The six channel bolts are used to adjust and hold the gate arm firmly in position inside the channel. Only one shear bolt is required which is inserted through both the channel and the gate arm. A three pin connector and cable is provided for the light circuit leading to the gate arm.

Four bolt holes, near the mechanism end of the adaptor, are provided for application to the Model "GS" gate arm bracket.

PRINTED IN U.S.A. A0. 70-500-1487.1

WESTINGHOUSE AIR BRAKE COMPANY
SIGNAL & COMMUNICATIONS DIVISION
Swissvale Post Office, Pittsburgh, Pa. 15218
An American-Standard Company

June, 1970

II. INSTALLATION AND MAINTENANCE (Refer to Figure 1)

The following installation procedure is recommended for mounting the WABCO Gate Arm Adaptor, with the Light Weight Aluminum Gate Arm, to the Model "GS" Gate Mechanism in accordance with approved application plans.

Some means must be provided to hold the gate mechanism in the horizontal position during installation.

1. Place the gate arm adaptor in position (without the gate arm) with the existing gate arm bracket and secure firmly with four bolts.

2. Refer to Table 1 for proper telescoping of the arm for desired length.

After the desired length of the arm has been determined, lay the three aluminum arm sections on a flat surface and assemble per View 'D'. Insert proper bolts in 1st and 2nd sections (per section "X-X" and "Y-Y") as indicated and tighten securely.

3. Place the assembled arm in the channel section of the gate arm channel. Secure the arm with the shear pin (3) per section "W-W".

NOTE

Tighten nut (7) on shear pin by hand to prevent damage to the pin and insert cotter key (8).

Adjust support plate (2) (View 'D') so that it bears against the end of the arm, then tighten support plate bolts. Adjust two bolts on back side of the channel by hand to take up side play and align arm properly inside the channel. Hand tighten the remaining four channel bolts, to take up slack between the arm and channel, and then secure all six bolts by tightening lock nuts.

CAUTION

Excessive tightening of channel bolts may damage or distort the arm support and change the shearing characteristics.

4. The lens for each gate arm light must be removed to insert bulbs which are packed separately for shipment to prevent breakage. This can be accomplished by removing three screws from either side of the lamp assembly. See illustration in View 'C'.

5. Insert the plug on the end of the arm wiring harness into the receptacle attached to the support plate as shown in View 'D'.

6. Connect the three conductor cable (wires 1A, 2A, and 3A) to the proper terminals inside the gate mechanism housing in accordance with approved application plans.

7. When the gate mechanism is in operation, check to see that the flashing light units on the mast and gate arm are all flashing properly. If any of the gate arm lights are not functioning, check the plug connector located inside the gate arm by removing the respective access plate below the light. See View 'C'.

III. PARTS LIST

Following is a parts list for the Gate Arm and Adaptor Assembly. The index numbers in this list are keyed to Figure 1.

ITEM NO.	DESCRIPTION	PART NO.
A	Gate Arm, three sections complete, with diagonal stripes of fluorescent red-orange and retro-reflective silver (includes wire harness with connector)	N451070-0201
B	Gate Arm, three sections complete, with diagonal stripes of black and retro-reflective silver (includes wire harness with connector)	N451070-0203
C	Gate Arm Adaptor Assembly (includes items listed below)	N451071-6001
1	Channel	R451071-5902
2	Plate, Support	M451071-1010
3	Bolt, Shear	M451071-4702
4	Connector, 3 Pin	J706864
5	Cable, 3-Conductor (#16)	A45564
6	Clamp, Cable	J700639
7	Nut, 3/8-16 Hex. Aluminum	J480220
8	Pin, 1/8 x 1" Stl. Cot. T. P.	J48620
9	Screw, 3/8 x 1-1/4 Hex. C. P.	J50056
10	Nut, 3/8-16 Hex. Jam. C. P.	J48010
11	Screw, 8 x 9/16 Rd. Br. N. P.	J51635
12	Washer, 8 Lk. Ph. Bz. N. P.	J47709
13	Washer, 8 Br. Pl. N. P.	J475052
14	Screw, 3/8 x 1 Hex. C. P.	J50053
15	Washer, 3/8 Stl. Pl. C. P.	J47502
16*	Washer, 3/8 Stl. Lk. C. P.	J47779
17*	Screw, 3/8 x 2-1/2 Hex. C. P.	J50063
18*	Nut, 3/8 - 16 Hex. C. P.	J48009

*Items used to bolt Adaptor Assembly to Model "GS" gate arm bracket. Gate arm bracket to be provided by customer.

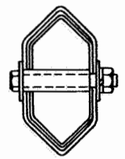

SECTION "X-X"

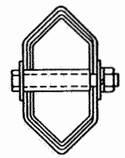

SECTION "Y-Y"

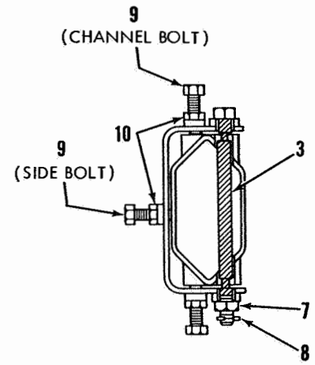

SECTION "W-W"

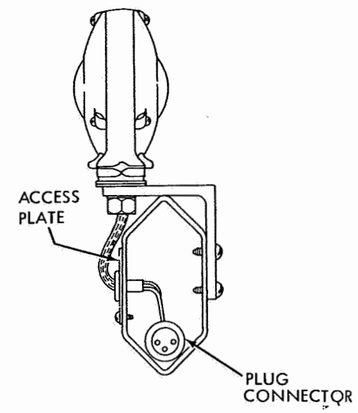

VIEW "C"

TABLE 1. ARM LENGTH TABULATION (SEE VIEW "A")

TOTAL LENGTH FROM CENTERLINE OF POST	"A" LENGTH	"B" LENGTH	"C" AMOUNT TO BE CUT OFF 3RD SECTION
27' 8-7/8"	8' 4-5/8"	8' 4-5/8"	
26' 8-7/8"	8' 4-5/8"	7' 4-5/8"	
25' 8-7/8"	8' 4-5/8"	6' 4-5/8"	
24' 8-7/8"	8' 4-5/8"	5' 4-5/8"	
23' 8-7/8"	7' 4-5/8"	5' 4-5/8"	
22' 8-7/8"	6' 4-5/8"	5' 4-5/8"	
21' 8-7/8"	5' 4-5/8"	5' 4-5/8"	CUT 1 FT. OFF 3RD SECTION ONLY
20' 8-7/8"	4' 4-5/8"	5' 4-5/8"	CUT 2 FT. OFF 3RD SECTION ONLY
19' 8-7/8"	3' 4-5/8"	5' 4-5/8"	CUT 3 FT. OFF 3RD SECTION ONLY
18' 8-7/8"	2' 4-5/8"	5' 4-5/8"	CUT 4 FT. OFF 3RD SECTION ONLY
17' 8-7/8"	2' 4-5/8"	4' 4-5/8"	CUT 4 FT. OFF 3RD SECTION AND 1FT. OFF 2ND SECTION AS SHOWN IN VIEW "A"

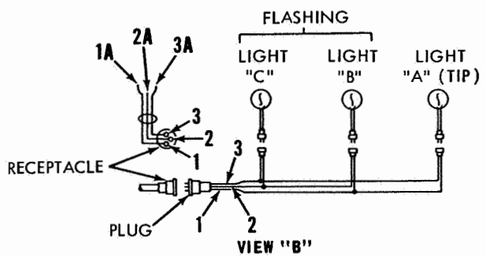

VIEW "B"
GATE LAMP CIRCUIT

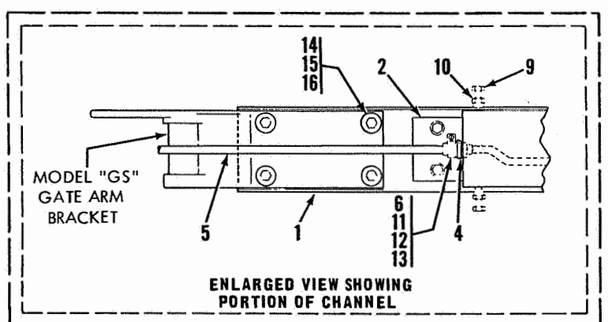

ENLARGED VIEW SHOWING PORTION OF CHANNEL

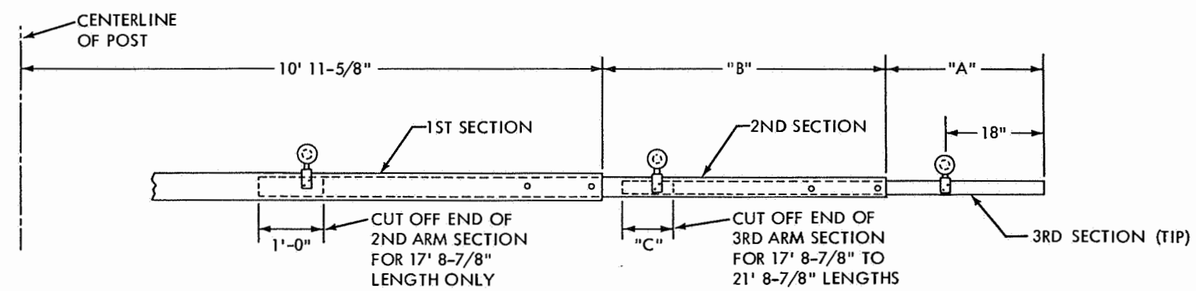

VIEW "A"
VIEW SHOWING ARM ADJUSTMENTS. SEE TABLE 1

"C" GATE ARM ADAPTOR, INCLUDES ALL PARTS SHOWN WITHIN DOTTED LINES EXCEPT ITEMS ATTACHED TO ARM. SEE PARTS LIST

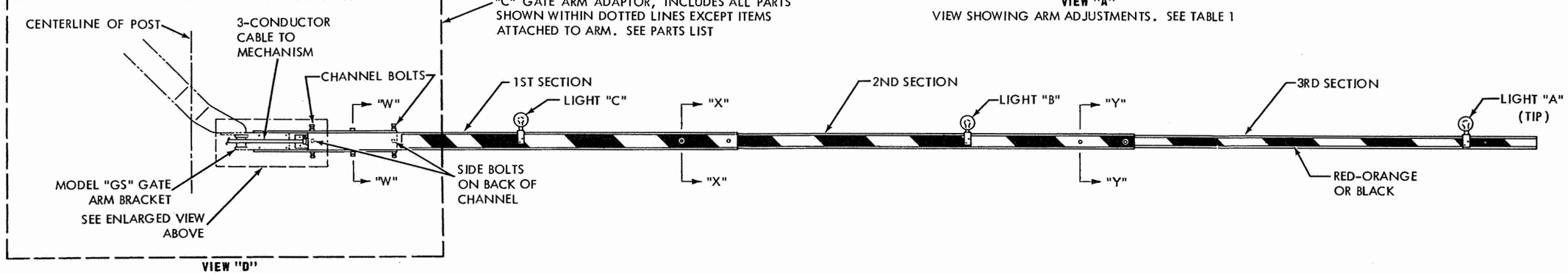

VIEW "D"

Figure 1. Gate Arm and Adaptor Assembly Parts Locations Diagram

SERVICE MANUAL 5958

Description, Installation, and Maintenance

GRADE CROSSING WARNING SYSTEMS

THIS MANUAL SUPERCEDES SM5958 DATED SEPTEMBER 1982

March 1985
WP0087D
A-3/85-300-1751-1
RINTED IN USA

UNION SWITCH & SIGNAL INC.
5800 CORPORATE DRIVE • PITTSBURGH, PA 15237

REVISION INDEX

This service manual supercedes all previously issued SM5958 manuals. Destroy all previously issued manuals. Future revisions to this manual will be handled by and addendum where as revised pages will be provided only.

CONTENTS

SECTION		PAGE
I.	GENERAL INFORMATION	1-1
1.1	INTRODUCTION	1-1
1.2	EQUIPMENT DESCRIPTION	1-2
1.2.1	Flashing Light Assembly	1-2
1.2.1.1	HC-120A Flashing Light Unit	1-2
1.2.1.2	HC-100 Light Unit	1-2
1.2.1.3	XA-120 Junction Box Crossarm	1-4
1.2.2	Model 75 Crossing Gate Assembly	1-4
1.2.2.1	Model 75 Gate Mechanism	1-4
1.2.2.2	Gate Arms	1-4
1.2.2.3	Counterweights	1-6
1.2.3	Bell Unit	1-6
1.2.4	Masts	1-6
1.2.5	Junction Box Base	1-7
1.2.6	Signs	1-7
1.2.7	Equipment Cases	1-7
1.3	CONTROL CIRCUITS	1-7
1.4	SUPPORTING PUBLICATIONS	1-8
1.5	MATERIAL, TOOLS AND EQUIPMENT	1-8
II.	APPLICATIONS	2-1
2.1	GENERAL	2-1
III.	INSTALLATION	3-1
3.1	GENERAL	3-1
3.2	PRE-PLANNING	3-1
3.2.1	Cable and Wire Requirements	3-1
3.2.2	Standards/Equipment Location Data	3-3
3.3	SITE PREPARATION	3-3
3.3.1	Excavation	3-3
3.3.2	Signal Mast Foundations	3-3
3.3.3	Cantilever Foundations	3-5
3.3.4	Control Case Foundations	3-5
3.3.5	Trenching for Cables	3-5
3.3.6	Backfilling and Grading	3-9
3.4	INSTALLATION PROCEDURES	3-9
3.4.1	Installation of Plain Clamp Base and Mast	3-9
3.4.2	Installation of Junction Box Base and Mast	3-10
3.4.3	Installation of Junction Box Crossarm	3-10
3.4.4	Installation of Light Units	3-10
3.4.5	Installation of Bell or Pinnacle	3-15
3.4.6	Installation of Signs	3-15
3.4.7	Installation of Equipment Cases	3-15
3.4.8	Installation of Relays	3-15
3.4.9	Installation of Crossing Gate Mechanism	3-16
3.5	CONNECTING EQUIPMENT	3-16
3.5.1	Ring Out Circuits and Cables	3-16

Contents (Cont'd.)

SECTION		PAGE
3.6	ALIGNMENT AND ADJUSTMENT PROCEDURES	3-16
3.7	FIELD INSTALLATION RECORD	3-16
3.8	TESTING AND FINAL CHECKS	3-16
3.8.1	Operational Test	3-16
3.8.2	Final Checkout	3-18
IV.	CONTROL CIRCUITS AND FUNCTIONAL OPERATION	4-1
4.1	GENERAL	4-1
4.2	TRAIN DETECTION TRACK CIRCUITS	4-1
4.2.1	Type "C" Track Circuit	4-1
4.2.2	Motion Monitoring Track Circuit	4-2
4.2.3	Audio Frequency Overlay (AFO) Track Circuit	4-3
4.2.4	Direct Current (DC) Track Circuit	4-4
4.2.5	High Frequency Track Circuit	4-5
4.3	ACTIVATION CONTROL CIRCUITS	4-6
4.4	POWER REQUIREMENTS	4-6
4.5	FUNCTIONAL OPERATION	4-7
4.5.1	Audio Frequency Overlay (AFO) Train Detection	4-7
4.5.2	Warning Activation	4-8
4.5.2.1	Flashing Warning Lights	4-8
4.5.2.2	Gate Activation	4-10
4.5.2.3	Warning Bell	4-10
4.5.3	Warning Activation by Manual Operation Control	4-10
4.5.4	Optional Control and Timing Applications	4-10
4.5.4.1	Signaling System Tie-In	4-10
4.5.4.2	Reverse Traffic Direction Warning Activation	4-10
V	MAINTENANCE	5-1
5.1	GENERAL	5-1
5.2	PREVENTIVE MAINTENANCE	5-1
5.2.1	Cleaning	5-1
5.2.1.1	Equipment/Materials Required	5-1
5.2.1.2	General Cleaning Procedures	5-1
5.2.2	Inspection	5-2
5.2.2.1	Grade Crossing Equipment	5-3
5.2.2.2	Control Equipment	5-3
5.2.3	Lubrication	5-4
5.3	SYSTEM OPERATIONAL TEST	5-4
5.4	TROUBLESHOOTING	5-4
5.5	CORRECTIVE MAINTENANCE	5-7
VI	REPLACEMENT PARTS	6-1
6.1	GENERAL	6-1
6.2	REPLACEMENT LAMPS	6-1

ILLUSTRATIONS

Figure 1-1	Grade Crossing Warning Systems	iv
Figure 1-2	Grade Crossing Warning Assembly With Gate	1-1
Figure 1-3	Flashing Light Assembly	1-3
Figure 1-4	Model 75 Gate Mechanism	1-5
Figure 1-5	Crossing Bell	1-7
Figure 1-6	Typical Grade Crossing Equipment Cases	1-9
Figure 3-1	Typical Location Plan for Highway Crossing Signals With or Without Gates for Two-way Highway Traffic (Right Angle)	3-4
Figure 3-2	Typical Location Plan for Highway Crossing Signals With or Without Gates for Two-way Highway Traffic (Acute Angle)	3-4
Figure 3-3	Foundation Height	3-5
Figure 3-4	Poured Concrete Foundations For Flasher Signals With Automatic Gates	3-6
Figure 3-5	Poured Concrete Foundations For Flasher Signals	3-7
Figure 3-6	Precast Foundations	3-8
Figure 3-7	Record of Field Installation Operational Check	3-12
Figure 3-8	Light Unit Alignment	3-13
Figure 3-9	Record of Field Installation Operational Check	3-17
Figure 4-1	Type "C" Track Circuit	4-2
Figure 4-2	Motion Monitoring Track Circuit	4-3
Figure 4-3	Audio Frequency Overlay (AFO) Track Circuit	4-4
Figure 4-4	Direct Current (DC) Track Circuit	4-5
Figure 4-5	High Frequency Track Circuit	4-6
Figure 4-6	Typical Grade Crossing Warning Control Scheme Using Non-Overlapping AFO Track Circuit	4-9
Figure 4-7	Typical Circuit Diagram, AFO-II Track Circuit, Single Track, AC Lighting	4-11

Figure 1-1. Typical Grade Crossing Warning System

SECTION I
GENERAL INFORMATION

1.1 INTRODUCTION

This manual provides a complete overview of Union Switch & Signal's Grade Crossing Warning Systems (Figure 1-1). The information contained in this manual, although general in nature, can be used as a valuable guide in the installation, operation, and maintenance of the US&S supplied equipment. Specific application information, if required, is presented in separate supplements to this manual.

Grade Crossing Warning equipment (Figure 1-2) is offered in many different configurations to satisfy various site requirements. Systems can be provided with flashing lights only or with flashing lights and gates. Flashing lights can be arranged for normal highway applications, converging highways, or for use with cantilevers. The lights can be either one-way or two-way (back to back).

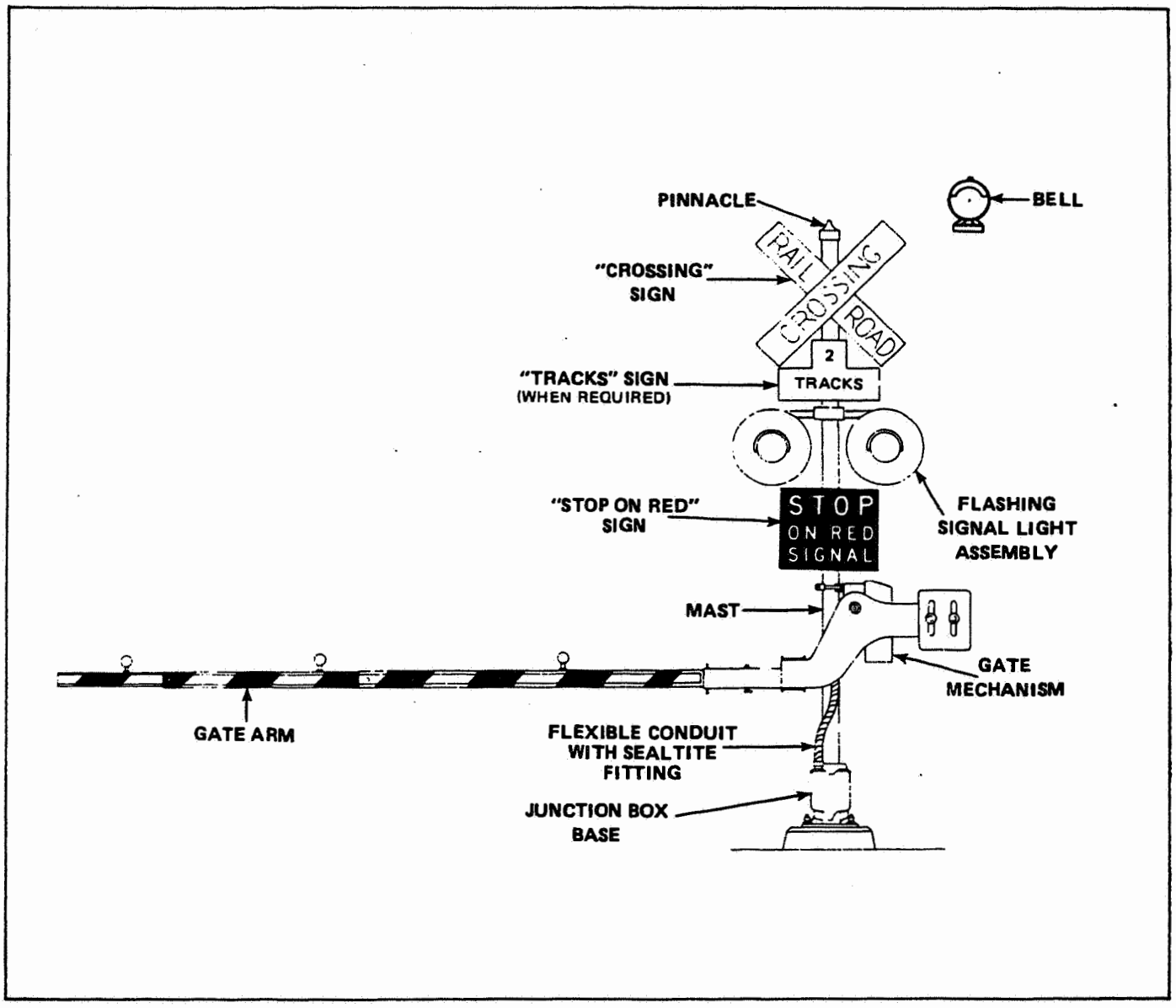

Figure 1-2. Grade Crossing Warning Assembly with Gate

Different control schemes are also available. These range from the very basic for use at industrial sidings, such as our AW-10 Area Directional Warning System, to our very sophisticated MM-25 Motion Monitor equipment.

1.2 EQUIPMENT DESCRIPTION

1.2.1 Flashing Light Assembly (Figure 1-3)

Flashing light assemblies consists of a XA-120 Junction Box Crossarm on which are mounted the flashing light units. The flashing light units are either the standard HC-100 (8-3/8" lens) or for increased light output the HC-120A (12" lens). Assemblies are available for 1-way and 2-way (back-to-back) applications and for use with crossing assemblies equipped with fiberglass, aluminum or wood gate arms, and for cantilever installations. The light units are equipped with a hood and either the standard 20" background or the 24" background (HC-120A Unit Only).

1.2.1.1 HC-120A Flashing Light Unit (Figure 1-3)

The HC-120A Light Unit is constructed of aluminum with stainless steel hardware, and utilizes a 12" deep dish paabolic refelector with a 12" red Lexan R roundel. The reflector is center mounted for easy replacement. The roundels come in different beam spread and deflection combinations. Therefore, when replacing a roundel in the field, it is important that it is replaced with one of the same kind. The cover, which is secured by a bolt that accepts the AAR terminal wrench, swings open to provide easy access to the interior for changing the lamp, interior cleaning, or other maintenance.

The lamp socket is brass plated and its mounting allows for X, Y, Z axis lamp location adjustment. The socket accepts 10 or 25-watt, 10-volt S-11 lamps; 25-watt 110-volt G-16-1/2 lamps; or 10-volt 16 or 36-watt Quartz-Iodide lamps. Voltage reading can be taken at the bulb for battery adjustments.

The light unit has a standard 1-1/4" straight pipe thread suitable for mounting the unit to all type crossarms.

1.2.1.2 HC-100 Light Unit (Figure 1-3)

The HC-100 Light Unit is constructed of aluminum for long service life and easy maintenance. It is equipped with a standard reflector and 8-3/8" roundel. The roundels are available in red Lexan R or red plexiglass, and yellow glass for special applications. Roundels come in different beam and spread combinations. Therefore, when replacing a roundel in the field, it is important that it is replaced with one of the same kind. The cover swings open for easy access to the interior for lamp replacement and other maintenance. The lamp holder is also 3-axis (X, Y, and Z) adjustable and uses the same lamps as the HC-120A Light Unit described in paragraph 1.2.1.1.

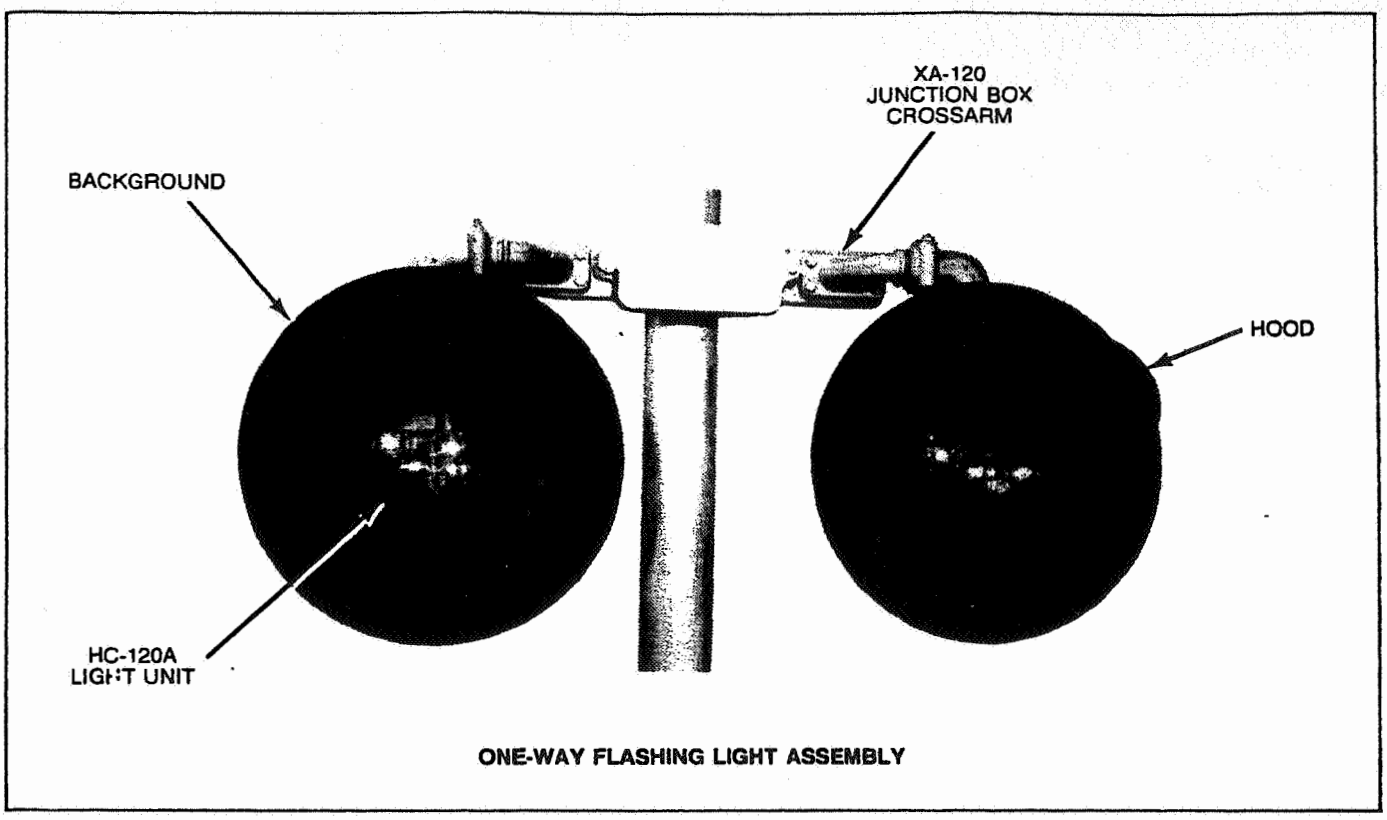

ONE-WAY FLASHING LIGHT ASSEMBLY

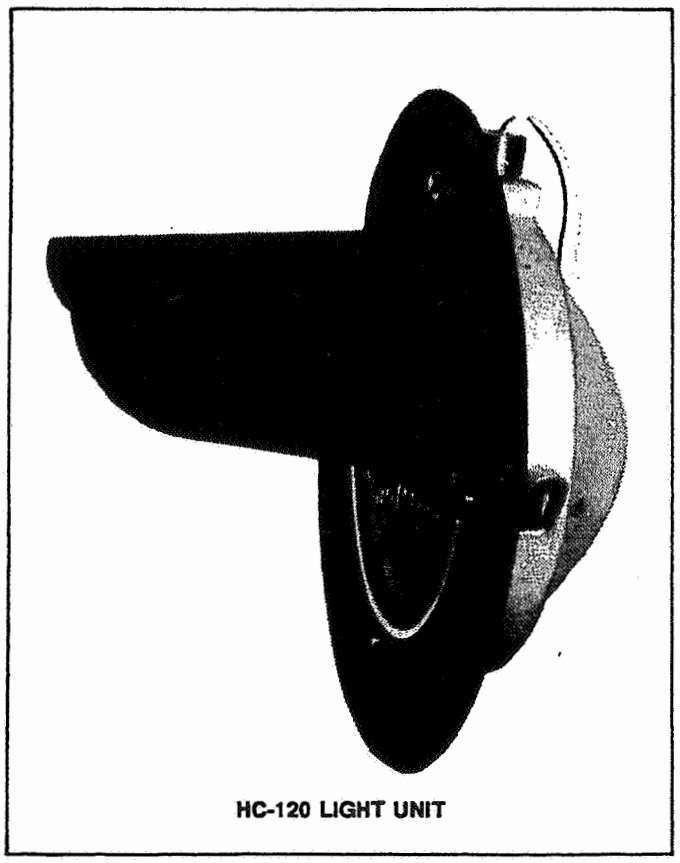

HC-120 LIGHT UNIT

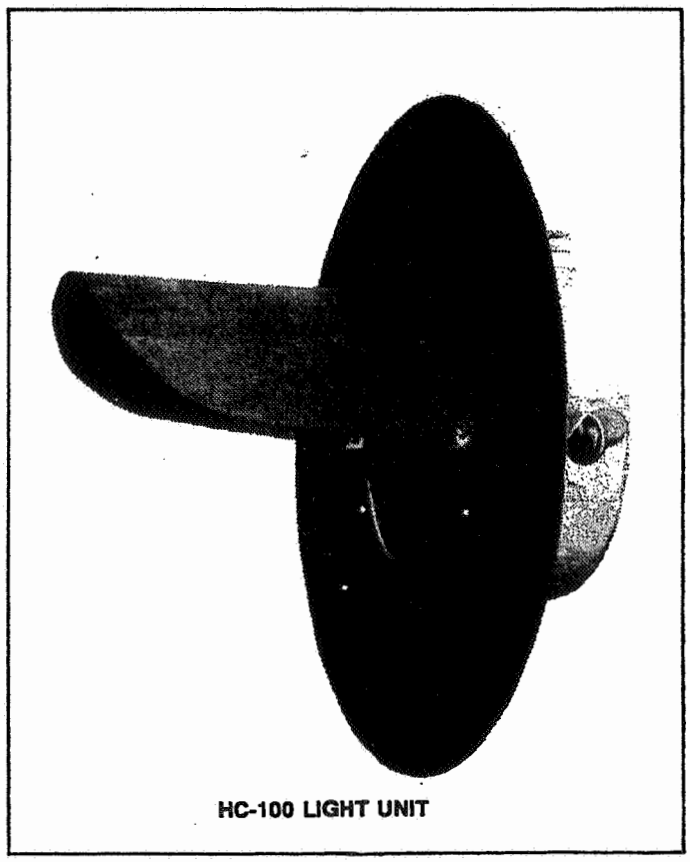

HC-100 LIGHT UNIT

Figure 1-3. Flashing Light Assembly

1.2.1.3 XA-120 Junction Box Crossarm (Figure 1-3)

Junction Box Crossarms are available in different configurations to provide a wide range of applications. The crossarms are constructed of aluminum for long service life, minimum maintenance, and ease of installation. The junction box, used for interconnecting the wiring, contains standard AAR terminals complete with terminal nuts and washers. Removable end plates are provided on the arms for easier access to the wires for stringing. Threaded elbows allow for independent horizontal (azmiuth) and vertical (range) adjustments of each signal. Attaching hardware consists of a U-bolt clamp and nuts. The nuts are located in the junction box.

1.2.2 Model 75 Crossing Gate Assembly (Figure 1-4)

The Model 75 Crossing Gate Assembly consists of the Model 75 Gate Mechanism and either aluminum, fiberglass, or wood gate arms. The automatic crossing gate is completely adjustable and is adaptable to 2 wire or 3 wire circuitry.

1.2.2.1 Model 75 Gate Mechanism (Figure 1-4)

The gate mechanism is mounted on a steel chassis, and is housed in an aluminum enclosure. The mechanism comes either with the DN-22A relay for 2 wire control circuitry or without for 3 wire control circuitry. The Gate is locked into the clear position by an electromagnetic brake. If the power fails, the gate arm drops to the horizontal.

The mechanism consists of the following: a permanent magnet dc electric motor, which requires a nominal 12-volt power supply, driving through a 115:1 gear reduction train; a hold clear unit (sometimes called electric brake) which is located on the motor armature shaft; and a circuit controller assembly, which has four contacts operated by a cam. Two circuit controller contacts are wired for mechanism control and two contacts are available for controlling external circuits, such as the bell and the clear position repeater relay. Contacts 1B-1C and 2B-2C are adjustable from 70 to 93 degrees.

Rubber bumpers are provided at 0- and 90-degree positions of the mechanism. A stop bolt is used in the top bumper to adjust the gate arm position when the arm is horizontal.

The splined ends of the main shaft extend out both sides of the mechanism for mounting the cast aluminum arm supporting members. The counterweights are attached to these supporting members and the support bracket for fiberglass, aluminum, or wooden arms. The total weight of the operating mechanism alone is approximately 225 pounds.

To facilitate maintenance, torque readings can be taken directly off the main shaft, and the gate arm can be manually cranked up or down. Also provided is a power cut-out link which cuts internal power to the mechanism without affecting power to the bell, arm lights, or signal flashers.

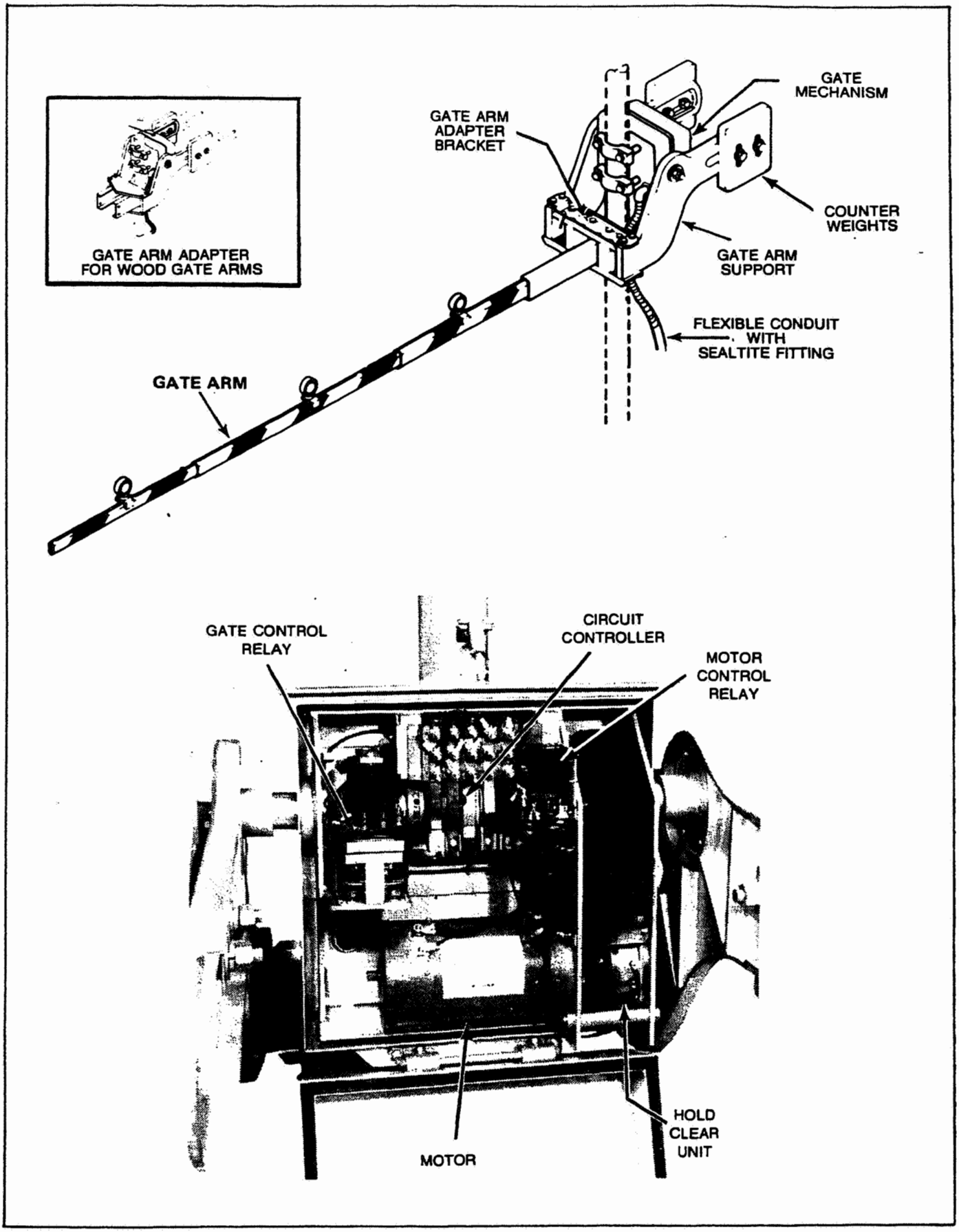

Figure 1-4. Model 75 Crossing Gate Assembly

1.2.2.2 Gate Arms (Figure 1-4)

Gate arms are either wood or telescoping aluminum or fiberglass. US&S does not provide wood gate arms. The telescoping aluminum gate arm consists of three sections of extruded aluminum. The telescoping fiberglass gate arm consists of the first section of extruded aluminum, and the second and third sections of pultruded glass reinfored polyester thermoset (fiberglass). Both come in adjustable lengths from 17 to 40 feet.

To warn on-coming vehicular traffic, three 10-volt weatherproof bi-directional 4" or 7" lights are mounted on the arm. Each is plug connected to the main harness. A plug connector is provided in the wiring harness between the first and second arm sections to facilitate arm replacement. Another plug connector is located between the gate arm and the mechanism. Additional warning is provided by the alternate Scotchlite reflective red and reflective white sheeting on the arms.

The gate arm is linked to the support assembly by a shear pin which helps to prevent mechanism damage if the arm is struck.

1.2.2.3 Counterweights (Figure 1-4)

Counterweights are supplied to suit each corresponding length of the gate arm. The weights are approximately the same for both fiberglass and aluminum arms. The weights are secured to the gate support arm supports with bolts and nuts. This allows for moving the counterweights forward or backward for proper gate arm balance and operation.

1.2.3 Bell Unit (Figure 1-5)

The bell unit is a Model BA-10 with a 12-inch steel gong mounted on a cast aluminum housing with a rain hood. A hinged aluminum cover is provided for easy access to the operating mechanism. The operating mechanism is a rotary solenoid driving a clapper. The solenoid is sealed against dirt and foreign material and requires no lubrication. Operating voltage is 10 Vdc, producing a sound level of 105 - 113 dbA at 180 - 190 strokes per minute.

1.2.4 Masts (Figure 1-2)

Masts for grade crossing warning assemblies come in two lengths; 13'6" and 15'3". The 13'6" mast is used in standard installations, while the 15'3" mast is used for converging highway applications. On the 15'3" mast, an additional hole is drilled at the appropriate degree from center to accommodate the additional crossarm.

Masts are constructed of aluminum for easy handling, long life, and minimum maintenance. Both 4" and 5" diameter masts are available. In general, the 5" diameter mast is used when the grade crossing warning assembly is equipped with automatic gates. Refer to Section VI for additional data, including ordering information.

1.2.5 Junction Box Base (Figure 1-2)

Aluminum Junction Box Bases are available for both the 4" and 5" diameter mast. They are used to support the mast and for terminating underground cable and for making circuit connnections. Bases come with either 12 or 24 AAR terminals, depending on application. A plain clamp base is also available for the 4" diameter mast. Refer to Section VI for additional data, including ordering information.

1.2.6 Signs (Figure 1-2)

Grade crossing warning signs are made of aluminum and include all hardware necessary for mounting. Signs are provided either in engineering grade Scotch-Lite R or Hi-intensity reflex-reflection, and conform to AAR requirements. The signs are: Railroad Crossing, Tracks, and Stop on Red Signal. Refer to Section VI for additional data, including ordering information.

1.2.7 Equipment Cases (Figure 1-6)

Equipment cases, located at wayside are provided in different sizes to accommodate the control equipment and ancillary items. They include the train detection equipment, plug-in relays, batteries, power supply components, and miscellaneous. These cases, constructed from Cor-Ten Steel, are provided with front and rear full size locking doors. Provisions are made for shelves and backboard.

1.3 CONTROL CIRCUITS

Standard DC, AC/DC, AFO (Audio Frequency Overlay), High Frequency and Motion Monitor track circuits are used to provide train detection for grade crossing warning control systems. To properly maintain the system, it is important to know what type of track circuit is used. For information on the different control circuits, refer to Section IV.

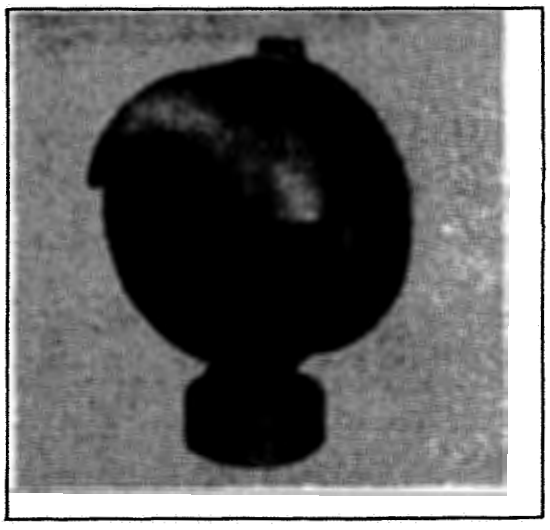

Figure 1-5. Crossing Bell

1.4 SUPPORTING PUBLICATIONS

For complete information on the components comprising a grade crossing warning system including maintenance and parts list, refer to Table I for a listing of all applicable service manuals.

Table I. List of Service Manuals

Model 75 Crossing Gate	SM6043
Flashing Light Unit w/Junction Box Crossarm	SM6326
BA-10 DC Aluminum Bell	SM6094
AFO-IIC Audio Frequency Overlay Track Circuit	SM6134
ATT-20 Audio Track Tranceiver	SM6299
AW-10 Directional Area Warning Device	SM6133
MM-25 Motion Monitor	SM6252
Type C Track Circuit	SM6120

1.5 MATERIAL, TOOLS AND EQUIPMENT

Normal cleaning materials consisting of clean lint free cloths, soft bristle brush, compressed air in aerosol can and a commercial detergent and solvent. Other than the tools required for the gate mechanism (refer to SM6043), no special tools are required to install and maintain the equipment, and the only test equipment required would be a good multimeter. Grease for the gate mechanism, called for in paragraph 5.2.3, should be made available.

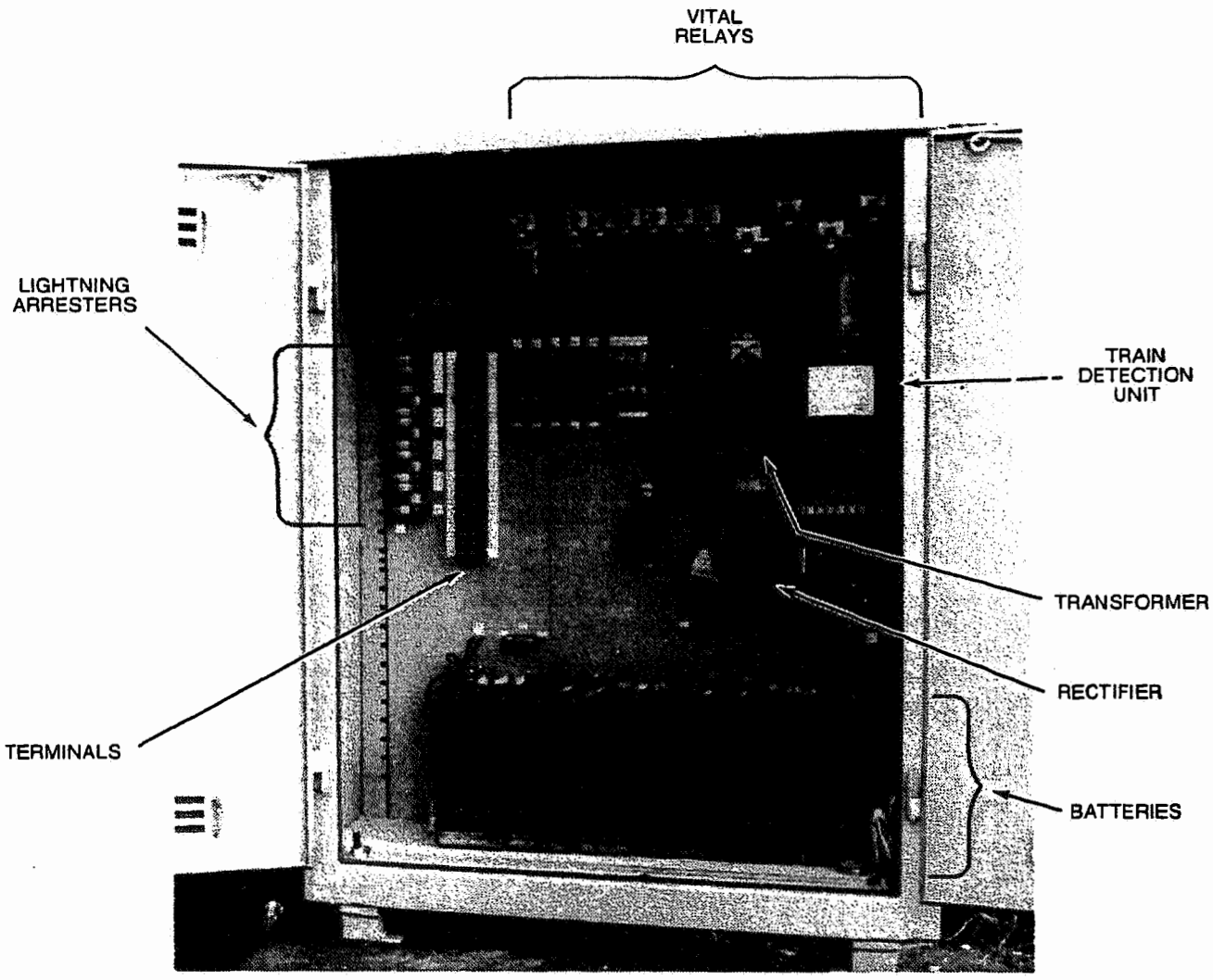

Figure 1-6. Typical Grade Crossing Control Equipment Case

SECTION II
APPLICATIONS

2.1 GENERAL

Grade Crossing Warning Systems can be applied anywhere a highway crosses a railroad. The type of equipment installed, and the type of control used is dependent upon many factors. For example; because of the terrain a cantilever may be required, or warning lights for converging highways may have to be installed. In certain areas, warning gates may also be required. When planning a grade crossing warning system all factors must be considered.

The train detection track circuit and control circuits must also be determined. For example: in coded track circuit territory, AFO equipment should be used. Where train traffic involves frequent stop, restart and reverse movements, motion monitor control is recommended. Section IV provides a brief description of the different controls available. For detail information, refer to the applicable service manual listed in Table I.

Because of the many variables, it is not practical to cover all the applications possible in this manual. For the equipment and controls that apply to a specific location, refer to the applicable layout drawings and circuit diagrams.

SECTION III
INSTALLATION

3.1 GENERAL

The plans and circuit diagrams developed for the specific location must be followed when installing a Grade Crossing Warning System. The following data are provided to guide in the proper planning and installation of the equipment. All equipment must be installed in accordance with rules and regulations imposed by municipal, state, and federal government agencies.

3.2 PRE-PLANNING

Because of the many variables involved, a site survey is recommended to determine the specific system to be installed. Table II is a typical site survey check list that can be adopted to suit particular needs. Upon completion of the survey, a plan should be made to show the location of all components and the sources of power. Based on this plan, a cabling diagram can be developed showing the length of cable runs between components and track, and the number of wires required for each cable. Information to be considered in a survey is covered in paragraphs 3.2.1 and 3.2.2.

3.2.1 Cable and Wire Requirements

Recommended cable and wire requirements are as follows:

a. No. 8 AWG in lengths of less than 50 feet.

b. No. 6 AWG in lengths of 50 feet to 120 feet.

c. Wire size would be proportional for longer lengths.

d. For track circuit connectors use 1-conductor No. 8 AWG underground cable, non-metallic sheath.

e. For connections to signals use 5-conductor No. 9 AWG underground cable, non-metallic sheath or single conductor No. 10 AWG underground.

f. For wiring signal units use 1-conductor No. 14 AWG flexible wire, 3/64-inch wall insulation, neoprene compound sheath, or equivalent.

g. For bonding track circuits use the Cadweld rail head type (or equivalent).

h. Track circuit bootleg connections and track rectifier connections are Tigerweld 1S-1 bond wires with 3/8-inch terminal on one end, other end tinned, 36-or 42-inch in length (or equivalent).

i. Ground wire is No. 6 AWG.

Table II. Site Survey Check List

The following is not meant to portray a complete site survey questionnaire but is typical of some of the information that will be found on a site survey that will aid in installation planning.

Customer _____

Location of Installation _____

Date _____

1. No. of Tracks — Single ☐ Double ☐ Other ☐

2. Type of Operation: Automatic ☐ Manual ☐
   If Automatic: Area Warning ☐ Directional Control ☐

3. Type of Highway: Traffic — One Way ☐ Two Way ☐

4. Maximum speed of fastest train in mph _____

5. Train switching or stopping in approach zones: Yes ☐ No ☐

6. No. of train movements per day over crossing _____

7. Within the control limits: Switches T or F ☐ Train Signals ☐ Track bonded ☐ Metal guage rods ☐

8. Rail Section _____
   4 hole joints ☐
   6 hole joints ☐

9. Ties — Wood ☐ Steel ☐ Concrete ☐ Other ☐

10. Power available at crossing: DC ☐ AC ☐
    Voltage _____
    Frequency _____

11. Standby power required: Yes ☐ No ☐
    A. Battery: Yes ☐ No ☐

12. Track Ballast Condition: 2 ohm ☐ 5 ohm ☐ Sand ☐ Other ☐

13. Highway at crossing: Width _____ ft.
    Angle _____

14. Crossing Signals located at: Sides of street ☐ Center of street ☐ Other ☐

15. Signals/Gates:
    Signal with 2 units ☐
    Signal with 4 units ☐
    Cantilevers ☐
    Lights on main masts ☐
    Gates (Length) ☐
    "No Turn" Light ☐

16. Bells required: Yes ☐ No ☐
    No. required _____

17. Signs required: Crossbuck ☐ SORS ☐ Tracks ☐

18. Track circuits: DC ☐ AFO ☐ Type 'C' ☐ Motion Monitor ☐

19. Cases factory wired: Yes ☐ No ☐

3.2.2 Standards/Equipment Location Data

Following is a general list of standards and location data that should be observed in developing a layout plan for the site. Figure 3-1 and 3-2 illustrate typical location plans.

a. Width and surface of roadway at grade crossing should correspond to that of the adjoining highway and have the same number and width of traffic lanes as the adjoining highway without extra lanes at the crossing.

b. The center of the foundations should be six feet from the edge of the curb or roadway, and no closer than 12 feet from the center of the closest track. (See Figures 3-1 and 3-2.)

c. Foundations shall be placed so that the signal assembly is square with the highway, regardless of the angle of the crossing. (See Figure 3-2.)

d. The top of all highway crossing signal foundations shall be 6 inches above the crown of the highway (see Figure 3-3).

e. Location of control cases and far end approach cases should be determined by accessibility of AC power and circuit design of the installation.

f. The location of bootlegs and other track connections are usually determined by the particular standards of each individual railroad.

3.3 SITE PREPARATION

3.3.1 Excavation

Excavation is required for foundations and underground cable trenches. Foundation requirements are covered in the following paragraphs. Cable trenches and holes for pedestal mounted junction boxes and bootlegs are dictated by local conditions and individual railroad standards. Follow normal installation procedures.

3.3.2 Signal Mast Foundations

Figures 3-4 and 3-5 provide details of poured concrete foundation for grade crossing masts. Figure 3-4 is for aluminum signal masts proposed for grade crossing warning systems with gate installations which have 11-11/16" x 11-11/16" bolt spacing at the base. Figure 3-5 is for aluminum signal masts which have 9-1/2" x 9-1/2" bolt spacing at the base. Precast foundations may be used in place of the poured foundation provided the correct bolt spacing is available. Information for precast foundations is shown in Figures 3-6.

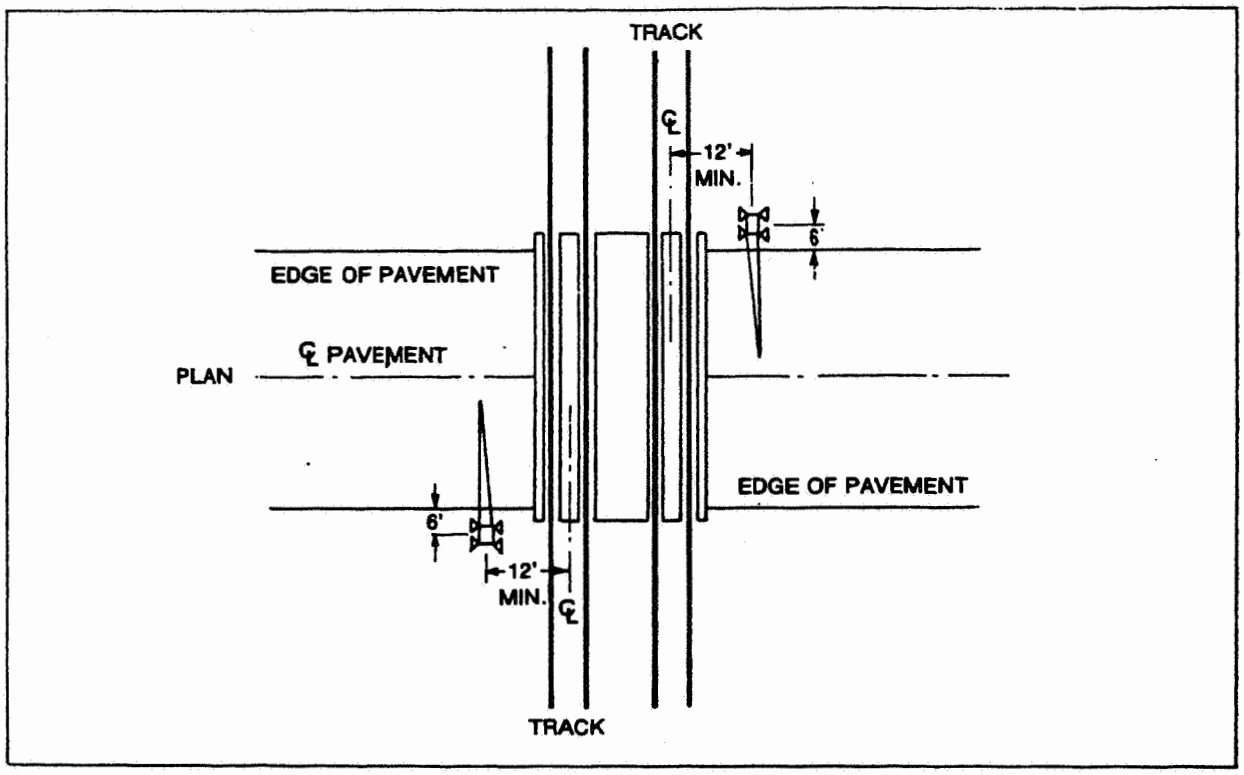

Figure 3-1. Typical Location Plan for Highway Crossing Signals With or Without Gates for Two-way Highway Traffic (Right Angle)

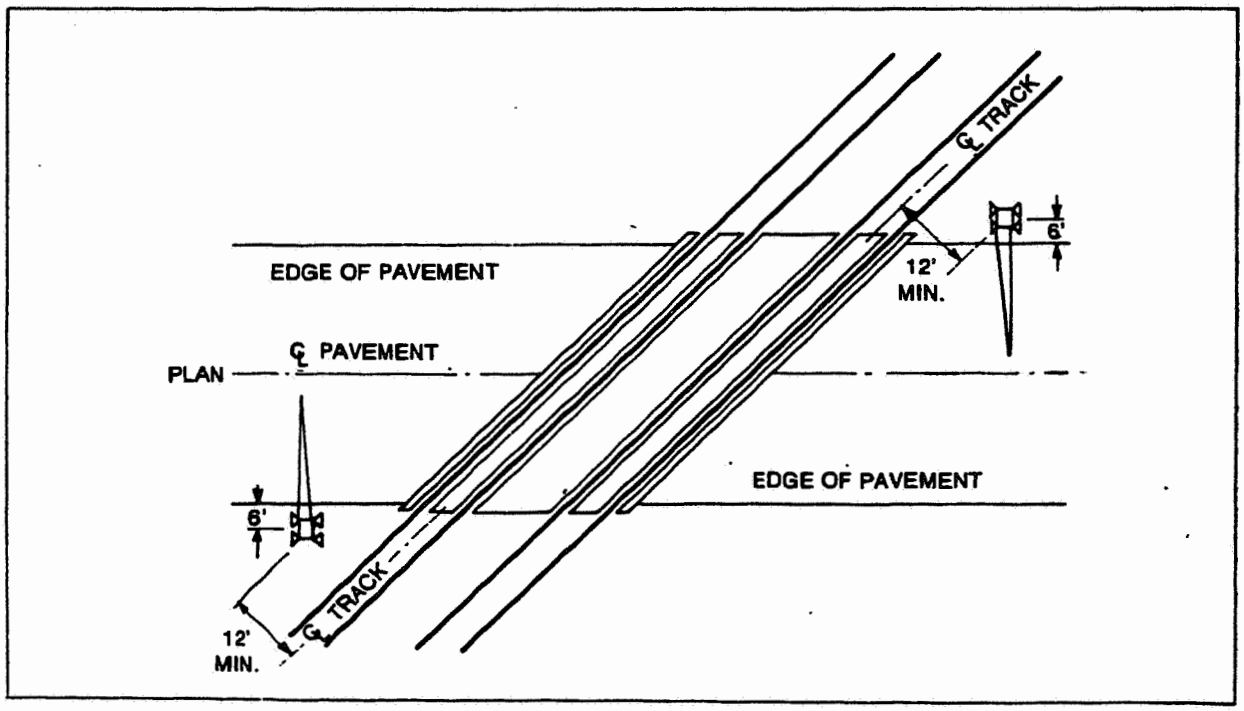

Figure 3-2. Typical Location Plan for Highway Crossing Signals With or Without Gates for Two-way Highway Traffic (Acute Angle)

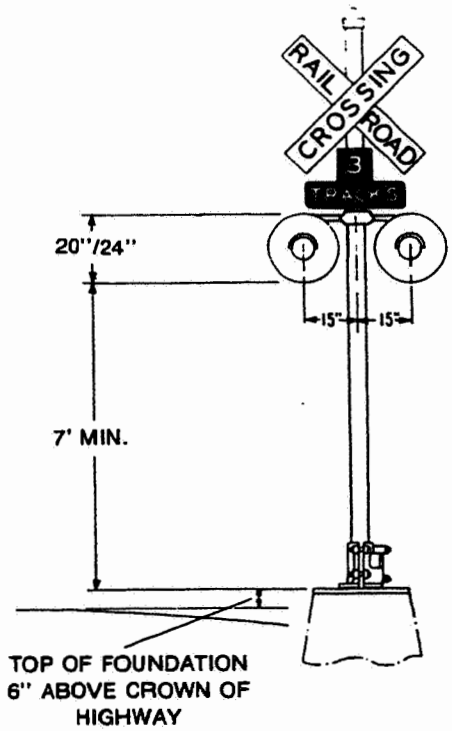

Figure 3-3. Foundation Height

3.3.3 Cantilever Foundations

Details of concrete foundations for cantilevers depends on the type cantilever used. This information will be detailed on the applicable plans.

3.3.4 Control Case Foundations

Cast iron piers are generally used with cases, but precast foundations can also be used. Some amount of excavation is required for both types.

3.3.5 Trenching for Cables

a. Use of a trencher or backhoe is recommended for a more uniform depth and direction.

b. Cables should be laid at a depth of 30 inches unless conditions or local regulations mandate otherwise.

c. Cables, in most instances, can be fed under roadways by using a "driving pipe".

d. If this is impractical, the roadway must either be torn up, or cables strung overhead.

A suggested poured concrete foundation for junction box bases with 11-11/16" x 11-11/16" bolt spacing is shown below.

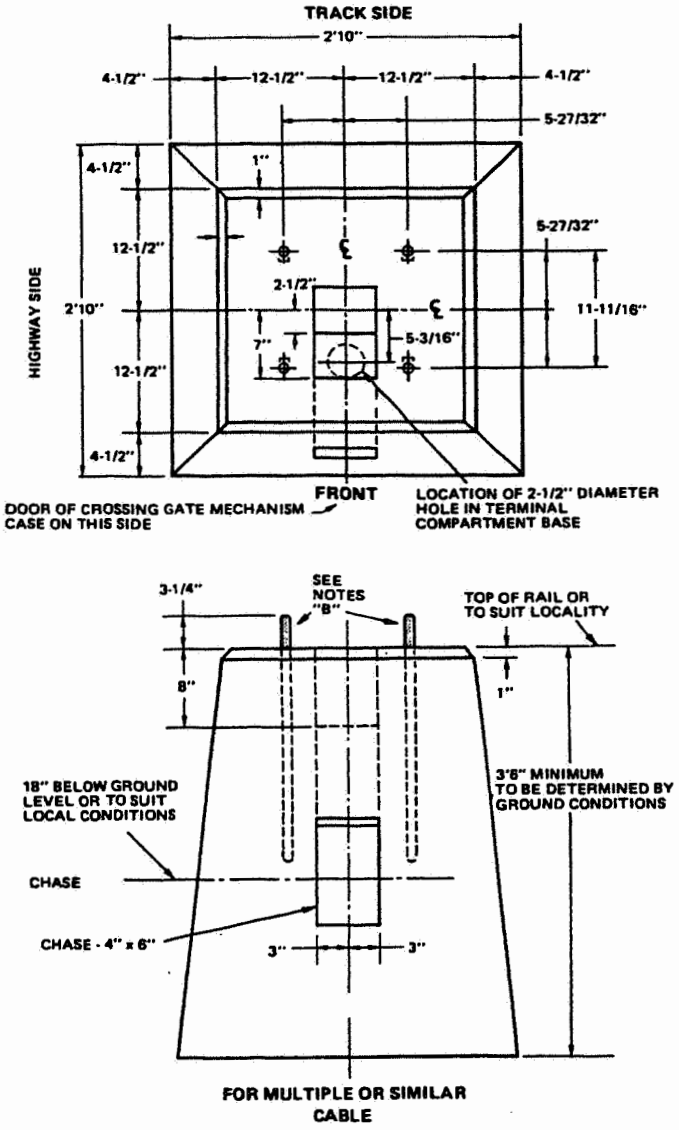

MATERIAL	NOTES
18 - Cu. Ft. Stone 9 - Cu. Ft. Sand 4.5 - Bags Cement Concrete Mixture 1-2-4 4 - Foundation Bolts with Hex Nuts and Washers.	A - Dimensions of chase may be varied to suit number of electrical conductors. Fibre or steel conduit of suitable diameter may be substituted for chase. B - Refer to ordering reference for foundation bolt size and part number.

Figure 3-4. Poured Concrete Foundations For Flasher Signals With Automatic Gates

Suggested concrete foundations for clamp bases or junction box bases with 9-1/2" x 9-1/2" bolt spacing are shown below.

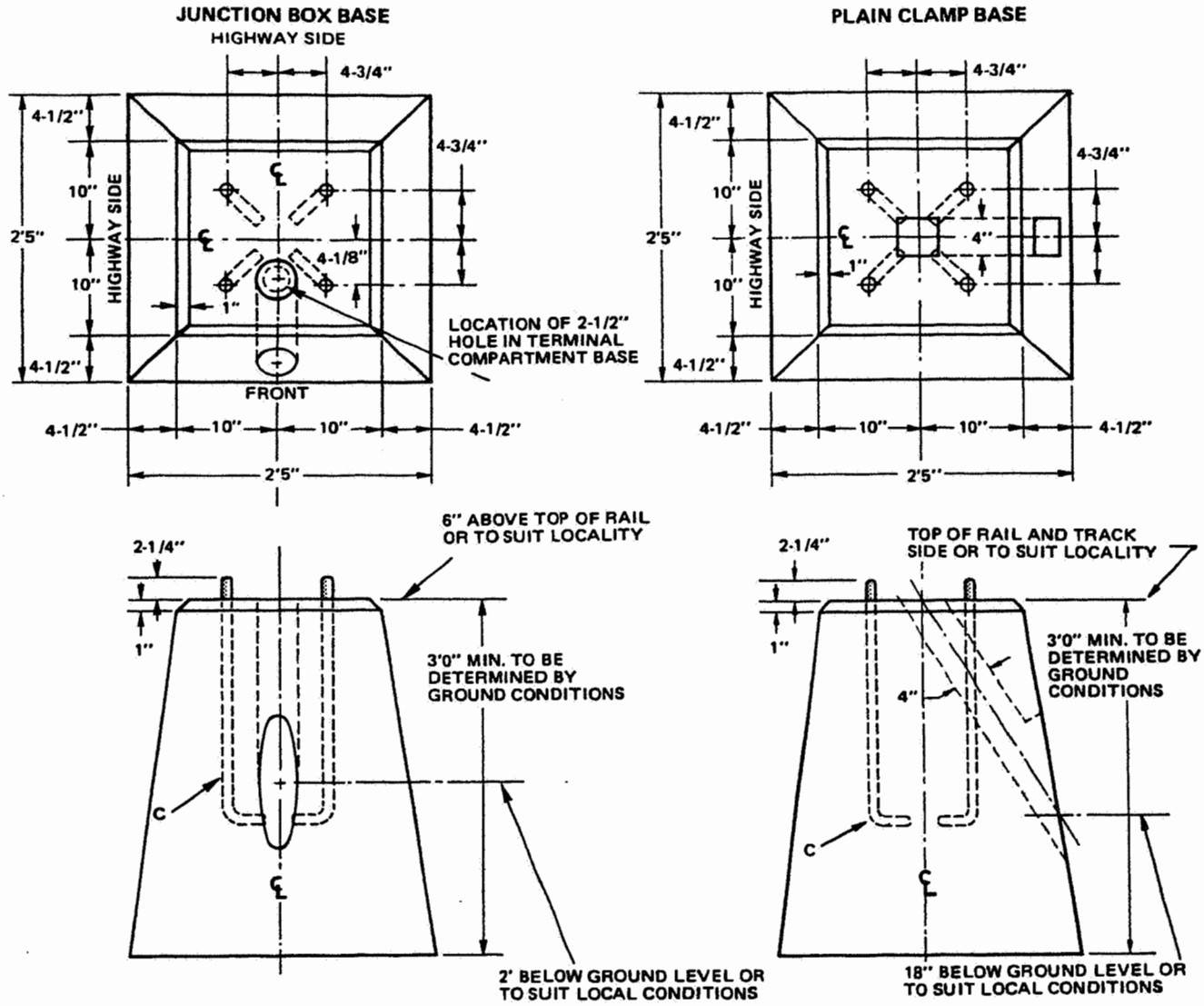

FOR MULTIPLE OR SIMILAR CABLE ARRANGEMENT WITH TERMINAL BOX LOCATED OPPOSITE SIDE FROM TRACK

FOR MULTIPLE OR SIMILAR CABLE

MATERIAL	NOTES
12.5 - Cu. Ft. Stone 6.25 - Cu. Ft. Sand 3.12 - Bags Cement Concrete Mixture 1-2-4 4 - Foundation Bolts 1" x 24" with Hex Nut and Washer. Conduit as required. See Note A.	A - Dimensions of chase may be varied to suit number of electrical conductors. Fibre or steel conduit of suitable diameter may be substituted for chase. B - Foundation to be placed square with the highway regardless of the angle of the crossing. C - Refer to ordering reference for foundation bolt size and part number.

Figure 3-5. Poured Concrete Foundations For Flasher Signals

PRECAST CONCRETE FOUNDATIONS FOR FLASHER SIGNALS AND FLASHER SIGNALS WITH AUTOMATIC GATES BY SECTIONAL FOUNDATIONS, INC.

Order by Model No., height, bolt length and total weight.

FOUNDATION MODEL NO.	BOLT CENTERS	HEIGHT	BOLT LENGTH	BASE 3-1/2" THICK	TOTAL WEIGHT
		FLASHER ONLY FOUNDATIONS			
SF-1	9-1/2" x 9-1/2"	2'6"	32-1/4"	30" x 30"	544 lb.
SF-1	9-1/2" x 9-1/2"	3'6"	44-1/4"	30" x 30"	702 lb.
SF-1	9-1/2" x 9-1/2"	4'6"	56-1/4"	30" x 30"	806 lb.
SF-1	9-1/2" x 9-1/2"	5'6"	68-1/4"	30" x 30"	910 lb.
SF-1X	9-1/2" x 9-1/2"	4'7-1/2"	58-1/4"	30" x 30"	860 lb.
		FLASHER AND GATE FOUNDATIONS			
SF-2	11-11/16" x 11-11/16"	3'6"	44-1/4"	30" x 30"	1096 lb.
SF-2	11-11/16" x 11-11/16"	4'6"	56-1/4"	30" x 30"	1293 lb.
SF-2	11-11/16" x 11-11/16"	5'6"	68-1/4"	30" x 30"	1490 lb.
SF-2	11-11/16" x 11-11/16"	6'6"	80-1/4"	30" x 30"	1686 lb.
SF-2	11-11/16" x 11-11/16"	7'6"	92-1/4"	30" x 30"	1882 lb.
SF-2	11-11/16" x 11-11/16"	8'6"	104-1/4"	30" x 30"	2078 lb.
SF-2X	11-11/16" x 11-11/16"	3'6-1/2"	44-1/4"	30" x 30"	996 lb.
SF-2X	11-11/16" x 11-11/16"	5'7-1/2"	69-1/4"	30" x 30"	1368 lb.

PRECAST CONCRETE FOUNDATIONS FOR FLASHER SIGNALS AND FLASHER SIGNALS WITH AUTOMATIC GATES BY PERMACRETE PRODUCTS CORP.

Order by Model No., height, bolt length and total weight.

FOUNDATION MODEL NO.	BOLT CENTERS	HEIGHT	BOLT LENGTH	BASE 3-1/2" THICK	TOTAL WEIGHT
		FLASHER ONLY FOUNDATIONS			
S-1	9-1/2" x 9-1/2"	2'6"	32-1/4"	30" x 30"	544 lb.
S-1	9-1/2" x 9-1/2"	3'6"	44-1/4"	30" x 30"	702 lb.
S-1	9-1/2" x 9-1/2"	4'6"	56-1/4"	30" x 30"	806 lb.
S-1	9-1/2" x 9-1/2"	5'6"	68-1/4"	30" x 30"	910 lb.
		FLASHER AND GATE FOUNDATIONS			
S-2	11-11/16" x 11-11/16"	3'6"	44-1/4"	30" x 30"	1096 lb.
S-2	11-11/16" x 77-11/16"	4'6"	56-1/4"	30" x 30"	1293 lb.
S-2	11-11/16" x 11-11/16"	5'6"	68-1/4"	30" x 30"	1490 lb.
S-2	11-11/16" x 11-11/16"	6'6"	80-1/4"	30" x 30"	1686 lb.
S-2	11-11/16" x 11-11/16"	7'6"	92-1/4"	30" x 30"	1882 lb.
S-2	11-11/16" x 11-11/16"	8'6"	104-1/4"	30" x 30"	2078 lb.

Figure 3-6. Precast Foundations

3.3.6 Backfilling and Grading

a. Backfill of trenches should not be done until a "megger" has been used on the cables to ascertain there is proper continuity and no crossed or exposed wires.

b. "Pull" concrete forms.

c. Fill and grade level.

d. Tamp fill thoroughly, especially around signals equipped with gates and cantilevers.

3.4 INSTALLATION PROCEDURES

This section describes the general procedures for installing the components of a Highway Grade Crossing Warning System. If more detailed information is required, consult the individual service manuals which are provided with each major component (refer to Table I).

NOTE

If preferred, with the exception of the gate mechanism and gate arm, the equipment may be assembled and mounted on the mast while on the ground and raised into its final position on the foundation. Make sure that all components are properly aligned to the road, etc. before raising in place.

3.4.1 Installation of Plain Clamp Base and Mast

NOTE

Mast and base are usually received as an assembly.

a. Feed the cables from the chase through the center of the base, up the mast and out the pre-drilled crossarm hole. Position the base on the foundation bolts. Check that the pre-drilled hole for the crossarm is correctly oriented.

b. Install nuts on foundation bolts and hand tighten.

c. Use a level and check all sides of the mast to ascertain that the mast is plum. (If not, shimming is required.)

d. Securely tighten all foundation bolt nuts.

3.4.2 Installation of Junction Box Base and Mast

a. Open the access cover at the junction box base and feed the cable from the chase through the junction box opening. Position the junction box base and mast on the foundation bolts. Check that the pre-drilled hole for the crossarm is correctly oriented.

b. Install nuts on foundation bolts and hand tighten.

c. On the mast, feed a cable through the pre-drilled hole for the crossarm to the junction box base.

d. Use a level and check all sides of the mast to ascertain that the mast is plum. (If not, shimming is required.)

e. Securely tighten all foundation bolt nuts.

3.4.3 Installation of Junction Box Crossarm

NOTE

The light units may be fastened to the junction box crossarms and pre-wired when received. If not, they may be mounted to the junction box crossarm before installing the junction box crossarm, or installed after the junction box crossarm is mounted (refer to paragraph 3.4.4.).

a. Open the junction box cover on the crossarm by loosening the two bolts and swinging the cover open.

b. Remove the U-bolts and temporarily place them aside.

c. Lift the crossarm into position and feed the cable protruding from the mast into the junction box outlet. Position the crossarm on the mast with the back of the junction box aligning with the pre-drilled hole in the mast.

d. Install U-bolt, nuts, and tighten securely. Torque U-bolts to 70-90 ft. lbs.

e. Connect the cable to the terminals as shown in Figure 3-7.

f. Close and secure the junction box cover.

3.4.4 Installation of Light Units

Both the HC-100 and HC-120A Light Units are installed in the same manner.

3.4.4.1 Installation Procedure

a. Open the junction box cover on the crossarm by loosening the two bolts and swinging the cover open.

b. Remove the elbow from the crossarm bracket and fasten to the light unit.

c. Carefully feed the pigtail from the light unit through the bracket and through the arm to the junction box. End plates on the arms may be removed to facilitate stringing the wires. A fish tape may also be helpful.

NOTE

If extension arms need to be attached, signal light brackets must be removed from junction box assembly. Remove the four screw nuts and washers that secure the signal light brackets to junction box assembly. Brackets can now be removed. Align the four holes in the extension arm cover plate with the holes in the junction box assembly, making sure that the gasket is between these two pieces. Install the four screws.

Slide gasket and signal light bracket or an extension arm (whichever is required) onto the screws. Install the four washers and nuts.

Remaining brackets must now be installed. Align the four holes in the cover plate of signal light bracket with the holes in extension arm cover plate. Make sure gasket is between these two pieces and install screws, washers, and nuts.

At this point, it is best to have arranged a fish wire or fish string through the crossarm and any extensions there might be so that the signal unit with elbow attached can be assembled to the remaining part of the crossarm unit as the fish wire is tied to the lamp pigtail and pulled through to the junction box.

d. Secure the light unit to the bracket. Loosen the set screws on the elbow and position light unit to its approximate final position. Repeat for all other light units.

e. Complete wiring by attaching leads to terminals in accordance with Figure 3-7.

f. Secure junction box cover.

g. If crossarm end plates were removed, replace and secure with attaching hardware.

h. Align the signal light units in accordance with paragraph 3.4.4.2 following.

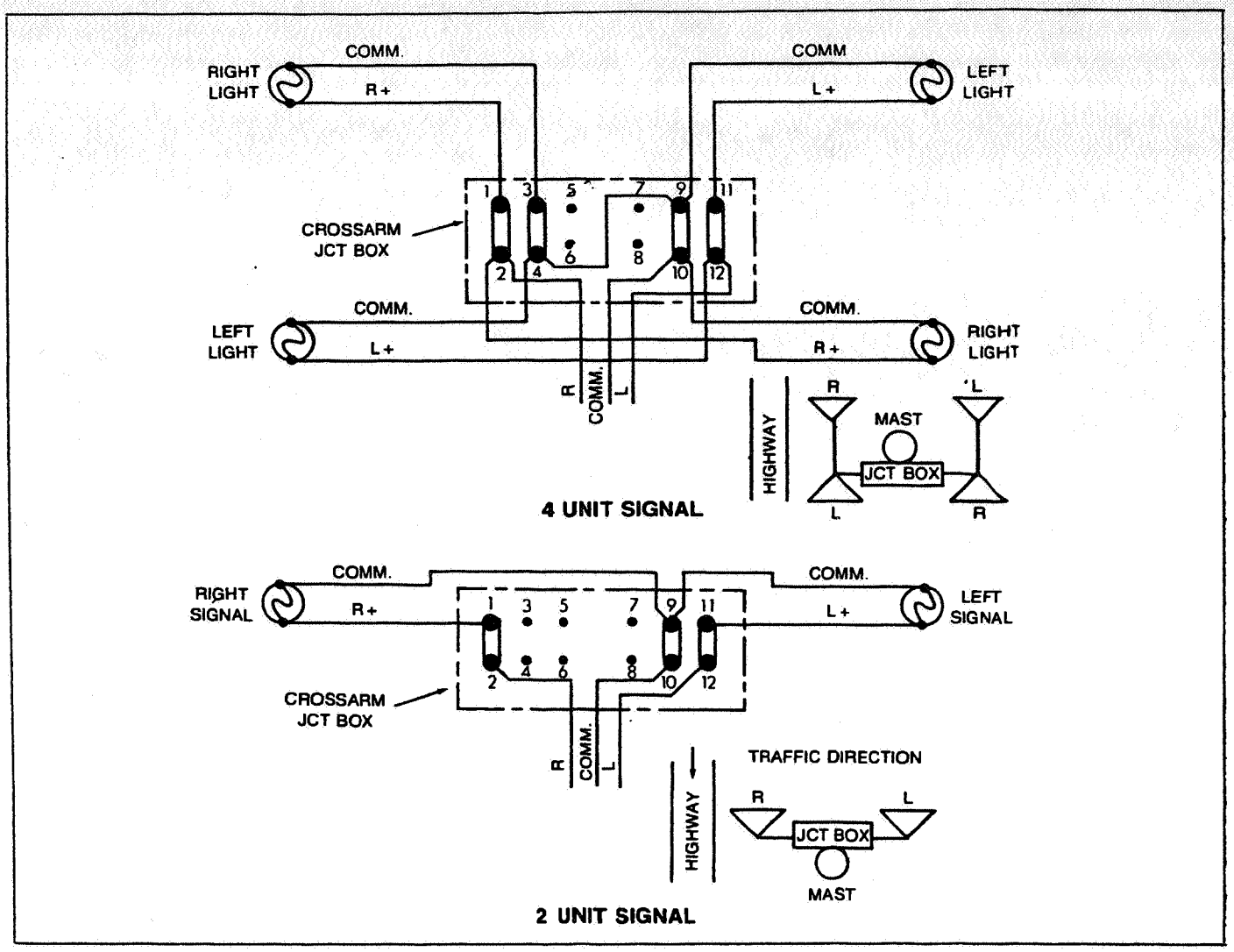

Figure 3-7. Signal Lamp Wiring Diagrams

3.4.4.2 Light Units Alignment (see Figure 3-8)

Vertical adjustment should be made first with the horizontal adjustment tightly clamped so that unit wiggling does not cause a bad vertical adjustment. A sighting tube (N170622) can be used to aid in the initial adjustment. The final adjustment should be checked by an observer on the road, safely .

AAR Signal Manual Part 268, 1972 Revision is repeated herein as a Guide to Signal Unit Alignment. Some sentences of manual Part 268 are omitted for simplicity sake.

ALIGNING HIGHWAY CROSSING SIGNAL REFLECTOR TYPE LIGHT UNITS
(REVISED SIGNAL MANUAL PART 268)

a. The aligning of electric light units in accordance with these instructions must not be started until proper protection has been afforded for highway and pedestrian traffic. When aligning, care must be exercised that no unsafe conditions are set up.

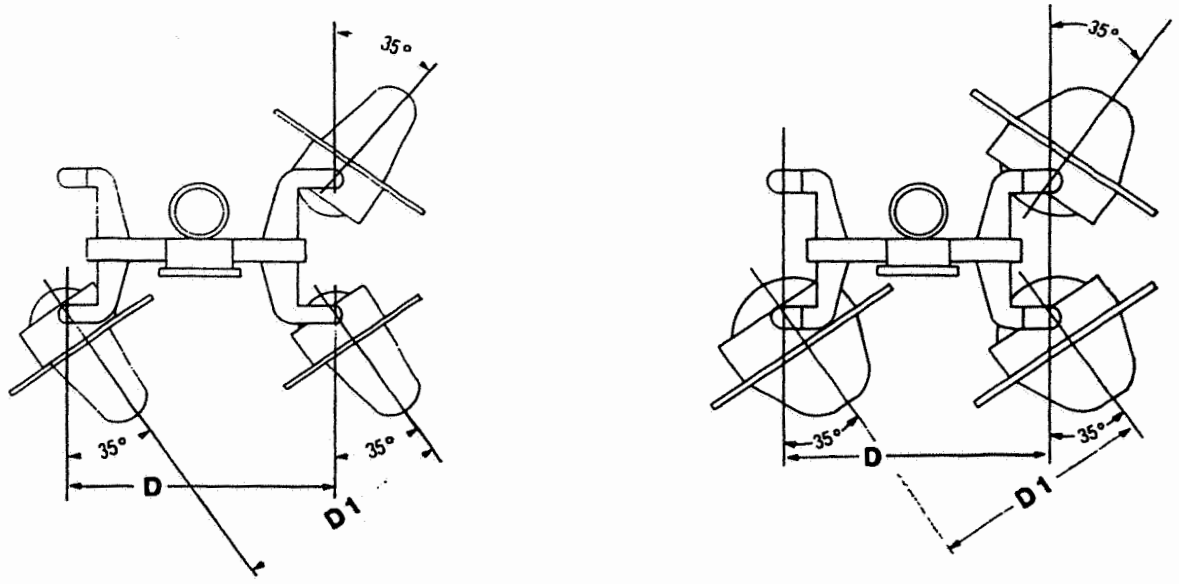

HC-100 HC-120

Azimuth (Horizontal) Alignment

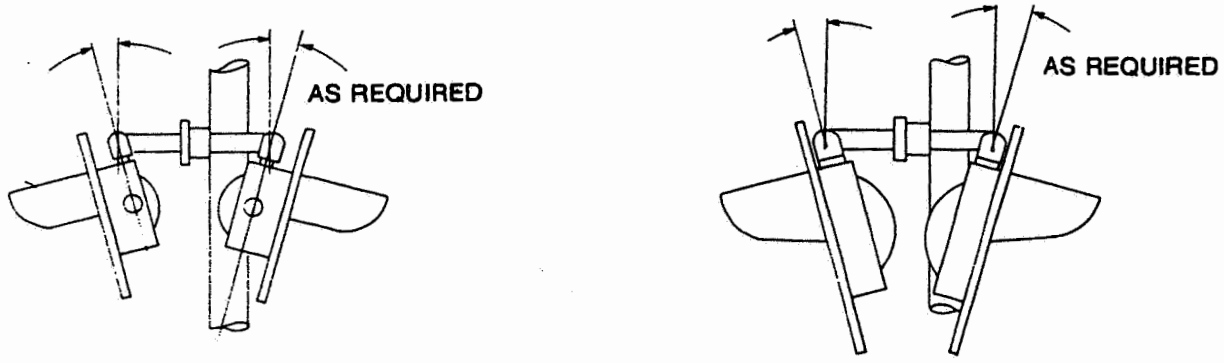

HC-100 HC-120

Range (Vertical) Alignment

Figure 3-8. Light Unit Alignment

(1) The lamp receptacles are positioned and sealed by the manufacturer, using 1/64 inch precision based lamps. To obtain the range and efficiency intended, signal precision lamps must always be used in the light units.

(2) When aligning of light units has been completed, tests must be made immediately to determine that the equipment functions as intended.

b. Procedure is as follows:

(1) Front Light Units

(a) Continuously light one lamp.
(b) Open door wide so clear beam is displayed.
(c) Adjust light unit vertically to align axis of beam five feet six inches above pavement at selected alignment distance. Both lamps should be aligned to same point.
(d) Adjust light unit horizontally to align axis of beam to center of approach lane in approach to signal at selected alignment distance, maintaining vertical alignment.
(e) Tighten clamps and close door.
(f) Repeat instructions for other front light units.

(2) Back Light Units Where Used

(a) Continuously light one lamp.
(b) Open door wide so clear beam is displayed.
(c) Adjust light unit vertically to align axis of beam five feet six inches above pavement at a point 50 ft. in approach to the signal on opposite side of track.
(d) Adjust light unit horizontally to align axis of beam to a point 50 feet with symmetric patterned roundels, 150 feet with non-symmetrical roundels in approach to the signal on opposite side of track and in center of approach lane, maintaining vertical alignment as in Instruction (2)(c).
(e) Tighten clamps and close door.
(f) Repeat Instructions for other back light units.

(3) After units have been aligned, clamps tightened and doors closed, they must be checked with lights flashing and lamps burning at recommended voltage to make certain a flashing light aspect is visible within a range of 1,000 feet.

NOTE

Torque on 3/8" U-bolt nuts of the crossarm elbows should be 15-20 ft.-lbs. Torque on 3/8" bolt which holds junction box door should be 8-13 ft.-lbs.

c. Assemble background and hood on each signal unit. Torque #10-32 screws which hold background and hood in place to 1-2 ft.-lbs.

3.4.5 Installation of Bell or Pinnacle

NOTE

The bell or pinnacle slides over the top of the mast and is secured by tightening one setscrew.

a. String wires from crossarm junction box through the mast and out the top.

b. Position bell with face of gong parallel to the highway. Open back of bell and feed wire to terminals. Attach wires to bell terminals and position on top of mast.

c. Tighten setscrew.

3.4.6 Installation of Signs

a. Position the signs on the mast as shown in Figure 1-2 (or Section VI), and secure with the hardware provided.

3.4.7 Installation of Equipment Cases

a. Remove control case from shipping skid.

b. Cut banding wire that secures ground pipe to bottom of case.

c. Set control case in position on foundation, aligning parkway cable with knockout in bottom of case. Secure to foundation with appropriate hardware.

d. Attach the "flower pot" or ground pipe coupler. Tighten the setscrews.

e. Feed all cables (or wires) through ground pipe into the case.

f. Pack oakum into the pipe to seal it, and top with Johns-Manville "Dux Seal", or equivalent.

3.4.8 Installation of Relays

Shelf-mounted relays are shipped already installed in the case. For installations using plug-in relays, the relays are shipped separately. These relays should be carefully unpacked and plugged into their respective locations. Keyed index plates prevent plugging the wrong relay in the wrong location.

3.4.9 Installation of Crossing Gate Mechanism

Complete instructions for installing the Model 75 Gate Mechanism, crossing gate arms, and counterweights are covered in Service Manual 6043. Refer to this manual for detail instructions.

3.5 CONNECTING EQUIPMENT

Prior to installing the equipment, it should have been ascertained that all cabling and wiring was completed. To connect the various components of the system, refer to the applicable installation diagrams.

3.5.1 Ringout Circuits and Cables

Ringing out a circuit simply means applying a "buzzer" or ohmmeter to the open ends of the wire to check continuity. Each line should be checked prior to hookup; then re-checked as units when they have been terminated.

3.6 ALIGNMENT AND ADJUSTMENT PROCEDURES

Generally, the alignment and adjustment to be accomplished upon completion of installation include signal light units, grade crossing gate mechanism, track circuits, and the lamp intensity. Alignment procedures for the light units are covered in paragraph 3.4.4.2. Complete alignment and adjustment procedures for the other items are contained in their respective service manuals. Refer to these manuals (Table I) for these procedures.

3.7 FIELD INSTALLATION RECORD

A permanent record of the installation adjustments, values, etc. for each site should be made. An example of a form that can be used for this purpose is shown in Figure 3-9. When properly filled out, this form will be a valuable aid in future servicing the equipment.

3.8 INSPECTION AND TESTING

3.8.1 Operational Test

To perform this test, track sections must be shunted at the battery or feed end and at the relay end. A satisfactory shunt arrangement should be of 0.06 ohms resistance. A fifteen (15) foot length of 16 gauge insulated wire, with ends soldered to files, provides an adequate shunt. While shunting, the files can be scraped on the rail to assure good contact.

a. Check all track circuits to see that the proper relay is being controlled from its respective section. Shunting of the track assures this, and in addition, it verifies that proper direction is being selected.

UNION SWITCH & SIGNAL DIVISION
Swissvale Post Office, Pittsburgh, Pa. 15218

UNION SWITCH & SIGNAL

RECORD OF FIELD INSTALLATION OPERATING TESTS

CUSTOMER _____ PROJECT _____

GO _____ LOCATION _____

TRK. PLAN DWG. # _____ RTE. SHEET DWG. # _____ CKT. DWG. # _____.

TEST: HIGHWAY CROSSING WARNING SYSTEM: To verify proper operation of systems being placed in service.

TRACK NO.	CONDITION	TRAINS/DAY	TIME BETWEEN TRAINS	A.C. LINE
_____	BALLAST _____ JOINTS _____	_____	Min. _____ Hr. Median _____ Hr.	____ V.A.C.

TYPE CONTROL	BATTERY FULLY CHARGED		BATTERY CHARGER	TRACK RELAYS
	LOCAL	TRACK		
	____V.	E(N) ___ V. Isl. ___ V. W(s) ___ V.	____ V.D.C. ____ A.	E(N) ____ MA. Isl. ____ MA. W(S) ____ MA.

TRANSF. SECOND. TAPS	CROSSING INACTIVE	CROSSING ACTIVATED	SENSITIVITY ADJUSTME (AFO, MM-10)
____ Second V.	_____ V.D.C. _____ A.	___V.D.C. __ V.A.C. ___A.D.C. __ A.A.C.	E(N) W(S) (Mark Slot Positior

VOLTS AT SIGNALS	APPROACH CONTROL	RECEDING CONTROL (Crossing Clears after Train clears Road)	TOTAL SIGNALS Operate Time/Trai
"A" _____ V. "B" _____ V.	From E(N) ___ Sec. From W(S) ___ Sec. Train Speed ___ MPH	Train Speed MPH ____ sec., _____ Ft.	_____ sec.

GATES TIME	TIMING RELAY SET.	GATE OPERATION
UP: "A" ___ sec., "B" ___ sec. DOWN: "A" ___ sec., "B" ___ sec.	_____ sec.	Down ___ sec. after signals start

REMARKS:

ATTESTED:

US&S REPRESENTATIVE _____ DATE _____

CUSTOMER REPRESENTATIVE _____ DATE _____

Figure 3-9. Record of Field Installation Operational Check

b. Simulate the movement of a train by first applying a shunt in the approach section. This will start the bell ringing, the lights flashing, and after 3-5 seconds flashing; cause the gate arm to descend.

c. With the first section still shunted, shunt the island circuit. There should be no change.

d. Shunt leaving section.

e. Remove the first shunt. No change should take place. Remove the island shunt. When the island shunt is removed, the gate arm should assume its vertical position, the lights should stop flashing, and the bell cease ringing.

f. Leaving section is still shunted but no warning stick relay is bridging track circuit down.

g. When leaving section is clear, system should return to normal and is ready for next move.

h. Repeat this procedure, beginning at the opposite end of the circuit and observe the functions as before.

3.8.2 Final Checkout

The final checkout of the system should include these points.

a. Re-check the focus and alignment of the signal units.

b. Measure the voltage of the lamp. Voltage should be at least 85% of the lamp rated voltage.

c. Check of the gate mechanism for proper operation.

d. Check the discharge of the batteries with an ammeter and set the rectifier for proper charging rate. This information is included with the installation plans. Keep storage battery between 1215 and 1220 specific gravity (or as specified for the batteries used).

e. External resistance in the battery circuits should be adjusted to provide at the track terminals of the track relay the recommended working voltage of the relay.

f. Make one last check of the site for items such as wire, which could result in shorts.

g. After all checks and adjustments have been made, turn on the entire system and observe that all track relays are energized, the gate arm is in the vertical position, and the lights and bell are not functioning.

SECTION IV
CONTROL CIRCUITS AND FUNCTIONAL OPERATION

4.1 GENERAL

For most system applications, all control equipment required to initiate highway grade crossing warning is located at the crossing. Control packages designed for Audio Frequency Overlay (AFO) track circuit application require additional equipment at the approach end. AFO track circuits and motion monitoring track circuits can be superimposed on existing direct current (dc) track circuits or applied separately in various combinations. The motion monitoring track circuit is highly recommended in switching areas where frequent stop, restart and reverse movements are made to minimize crossing down time. All controls for the Motion Monitor are located at the crossing. The Type "C" track circuit scheme, because of its high shunting sensitivity, is recommended for application at difficult shunting areas. It is intended for use in non-signalled territory. The type "C" track circuit is not suitable for overlay track circuit application; therefore, it should not be used in a similar manner as AFO and motion detection track circuits. Conventional direct current (dc) track circuit schemes are also incorporated with various control packages as well as high frequency track circuits.

4.2 TRAIN DETECTION TRACK CIRCUITS

Train detection track circuits are used to determine track occupancy when a train approaches the grade crossing. When a track circuit is occupied, a control circuit is activated and the warning signals start to flash and the gates, if provided, will drop. Anyone of the following basic track circuits are most practical for non-electrified railroad applications. Most track layouts can be adapted to one of these basic schemes. Equipment arrangement and circuitry can be modified to suit special applications when required. The track circuits which will be described are the basic Type "C" track circuit, motion monitoring track circuit, audio frequency overlay (AFO), direct current (dc) and high frequency track circuits. For detailed information on the specific track circuits used, refer to the applicable service manual listed in Table I of this manual.

4.2.1 Type "C" Track Circuit (Figure 4-1)

The Type "C" track circuit is an ac-dc track circuit designed to detect the presence of a train. A dc relay is connected across an ac power source (inverter) which is connected to the rails. A track rectifier is also connected across the rails at the opposite end of the track circuit providing a halfwave shunt across the relay coil.

This rectified ac signal energizes the relay. A train on the track circuit shunts the rectifier and reduces the rail potential resulting in a low power ac wave being presented to the dc relay. This combination of events causes the track relay to become deenergized, thus initiating grade crossing warning.

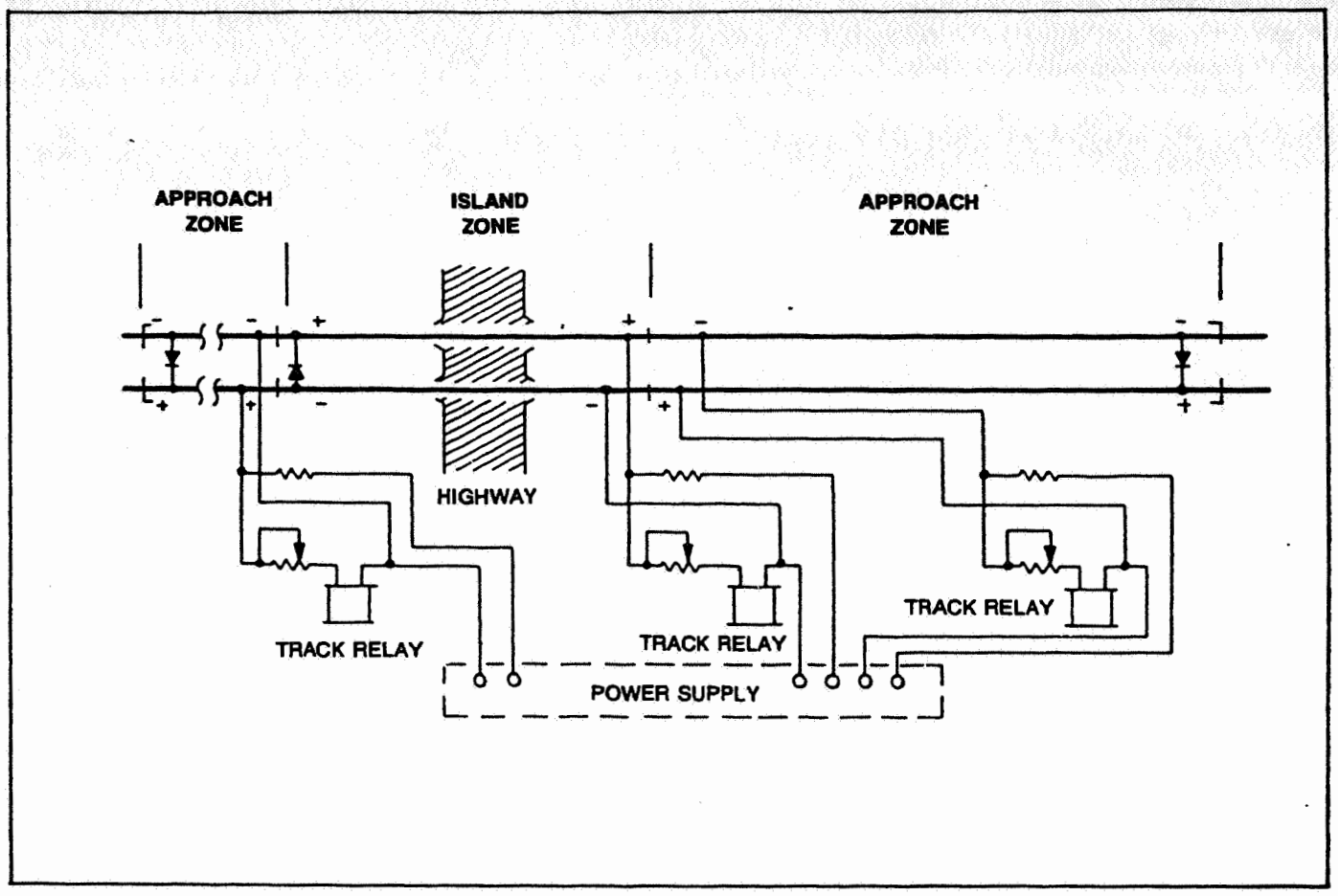

Figure 4-1. Type "C" Track Circuit Scheme

Type "C" track circuits must be isolated with insulated rail joints and all rail ends within the track circuit must be bonded to ensure proper electrical continuity. This type of track circuit is economical and provides good shunting characteristics where rails tend to be rusty. All power supply equipment is located at the crossing.

4.2.2 Motion Monitoring Track Circuit (Figure 4-2)

The Motion Monitor train detection device is designed for application without insulated rail joints, except for special applications. This device detects train motion by continuously measuring track circuit characteristics. A constant current signal is fed into the rails adjacent to the highway grade crossing. This signal develops a rail to rail voltage proportional to the track circuit impedance. As a train proceeds toward the crossing, the moving shunt effect of the train causes the impedance of the track circuit and the rail voltage to decrease at the feed point. The rate at which the impedance decreases is related to train speed, position of train within the warning zone length, rail impedance and ballast resistance. The detection device includes the island zone (grade crossing area). A self-contained receiver, which is connected to the rails on the opposite side of the highway from the track feed, continuously monitors the rail to rail voltage at that point. If a train shunt

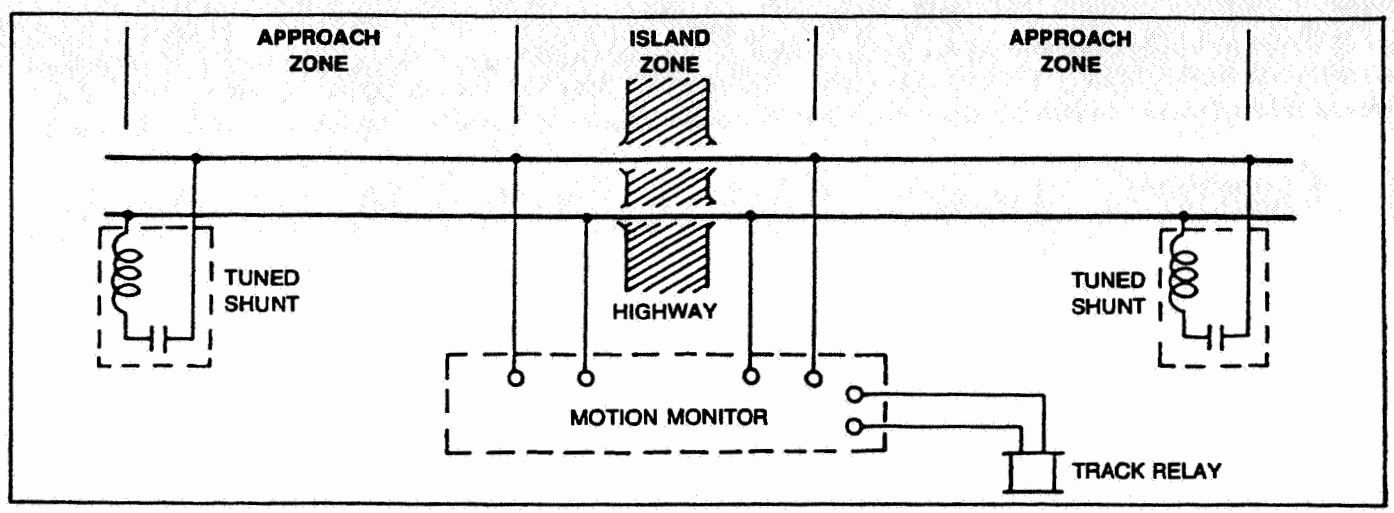

Figure 4-2. Motion Monitoring Detection Track Circuit
For Signalled Territory
(Use hard wire shunt in place of tuned shunt in non-signalled territory)

occurs within the island zone (between rail connections), the receiver input voltage will fall below the island receiver's threshold, thus detecting the presence of a train.

A motion monitoring detection circuit may be applied as a sole means of train detection where maximum train speeds are less than 20 mph. It is recommended, where train speeds exceed 20 mph, that AFO wrap-around be installed to detect high resistance rail breaks or faulty connections. A motion monitoring detection circuit can be superimposed on existing dc or AFO track circuits, which then serve as the wrap-around; however a motion monitoring track circuit cannot be superimposed on a Type "C" track circuit. Track coupling units must be used to pass the current signal around insulated joints. A tuned shunt (or hard-wired shunt in non-signaled territory and where wrap-around is not used) is connected across the rails at the approach ends of the track to terminate the detection circuit.

All rail ends within the warning zone area must be bonded to ensure proper electrical continuity. Double bonding is recommended for additional protection.

4.2.3 Audio Frequency Overlay (AFO) Track Circuit (Figure 4-3)

The AFO track circuit is designed for use without insulated rail joints. This is particularly useful when insulated rail joints would be a problem or where continuous welded rail is employed. AFO circuits can also be superimposed on existing dc track circuits. Depending upon distance required, a low-power transmitter is used for track circuits up to approximately 3500 feet or a high-power transmitter may be used for lengths over 3500 feet. Frequencies vary from 885 Hz to 6180 Hz for single track operation, and 930 Hz to 6330 Hz for the second track in double track applications.

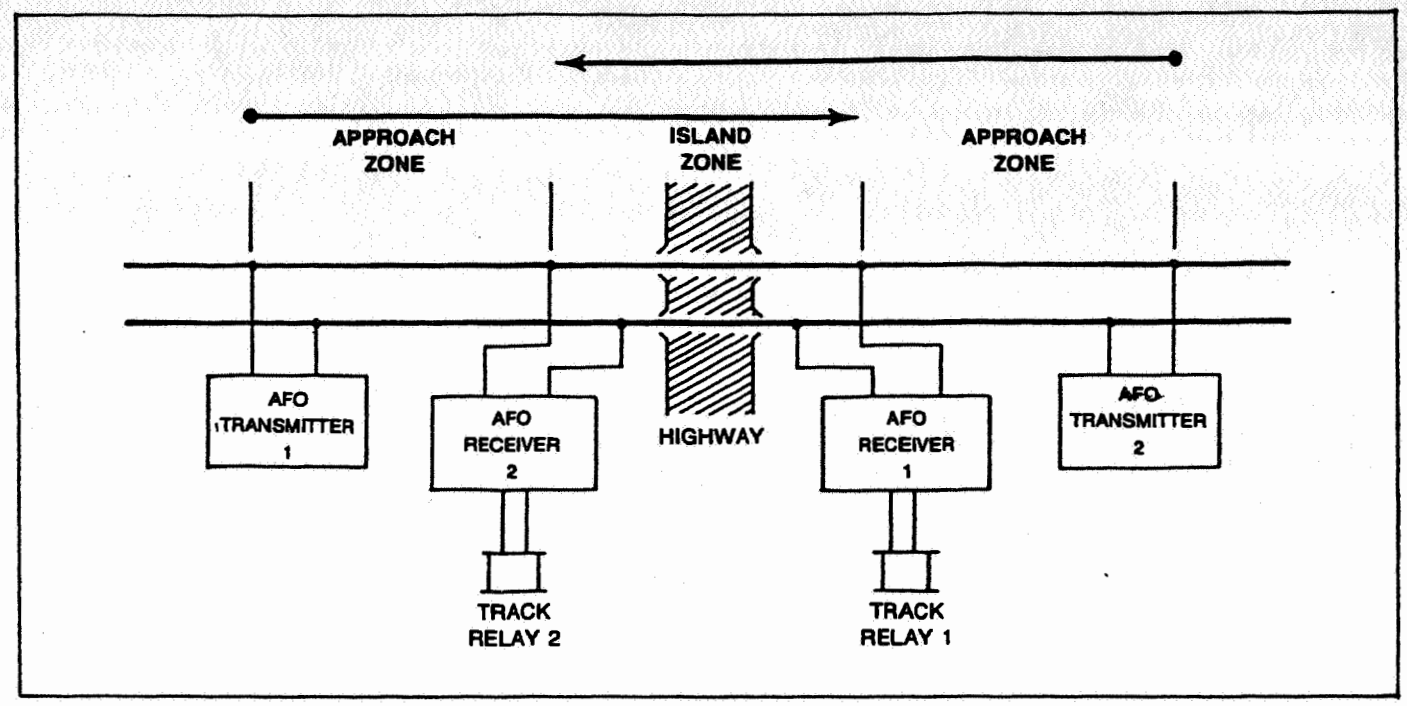

Figure 4-3. Audio Frequency Overlay (AFO) Track Circuit with Overlapping Track Circuits

The AFO system provides 16 different frequencies divided into two groups of eight each: class 1 is recommended for single track and class 2 is recommended for the second track.

The AFO circuit introduces an audio frequency signal from a solid state oscillator into the track at the transmitter approach end. This signal is detected by a receiver located at a second position adjacent to the crossing. In the receiver, the signal is amplified and rectified into a dc control voltage which then energizes a relay. The relay remains energized while the signal is being received and is deenergized by the train shunt. This type of track circuit can be used for either signalled or non-signalled applications. Two AFO track circuits are required for crossing warning. The overlap at the crossing provides an equivalent island circuit.

4.2.4 Direct Current (DC) Track Circuit (Figure 4-4)

The dc type track circuit employs a constant energy flow to detect the approach of a train. At the battery end of the track circuits, current is fed into both rails to energize a relay located at the opposite end of the circuit. A train shunt reduces the rail potential below the drop-away value of the relay and de-energizes the relay which activates the control circuit.

DC track circuits must be isolated from adjacent track circuits with insulated rail joints. Rail ends within the track circuit must be bonded to ensure proper electrical continuity.

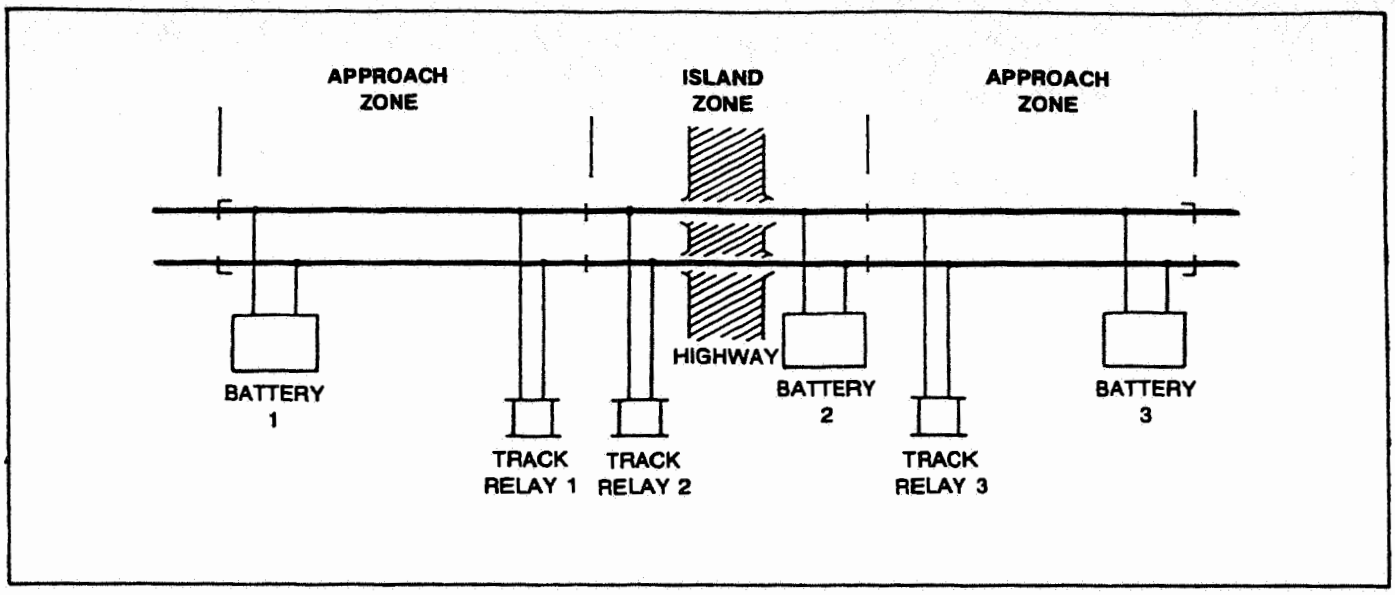

Figure 4-4. Direct Current (DC) Track Circuit

4.2.5 High Frequency Track Circuit (Figure 4-5)

The high frequency AW-10 device is a short-range train detection system suitable for applications involving restricted train speeds and limited approach distances. A typical application provides a 20-second warning time for 10 mph traffic at highway crossing applications having a minimum approach length of 300 feet; and may be operated in either a directional or non-directional mode.

The device consists of a transceiver unit and two separate transponder units. The transceiver unit contains a transmitter and two receivers; each receiver is tuned to a dedicated transponder frequency.

The transceiver, housed at the crossing, transmits a 24 kHz signal through the rails to each of the transponder units which can be buried beneath the rails at each of the approaches. This signal is used as a source of power for each of the transponder units which reply with respective 37.5 kHz and 42 kHz signals to the receiver portion of the transceiver which consists of independent channels. In the respective receiver channel, the appropriate transponder signal frequency is detected and produces a negative dc drive voltage which energizes a corresponding vital output relay that interfaces with the highway warning apparatus. If train traffic is not within the 300-foot approach boundaries, the input signal to the respective receiver channel is of sufficient strength to pick the corresponding track relay. When train traffic approaches within 300 feet of the crossing, signal energy from the respective transponder is shunted away from the associated receiver channel input. When this occurs, the receiver output drive signal becomes insufficient to maintain the vital output relay in a picked (energized) condition, and the relay armature drops, thereby enabling the highway crossing warning apparatus. The high frequency signals used in the AW-10 provide for excellent track circuit definitions that permit less than 15 feet spillover or ringby. Furthermore, the unit can provide a shunting sensitivity of up to 0.6 ohm to permit effective system operation in industrial areas with a potential of rusted rails.

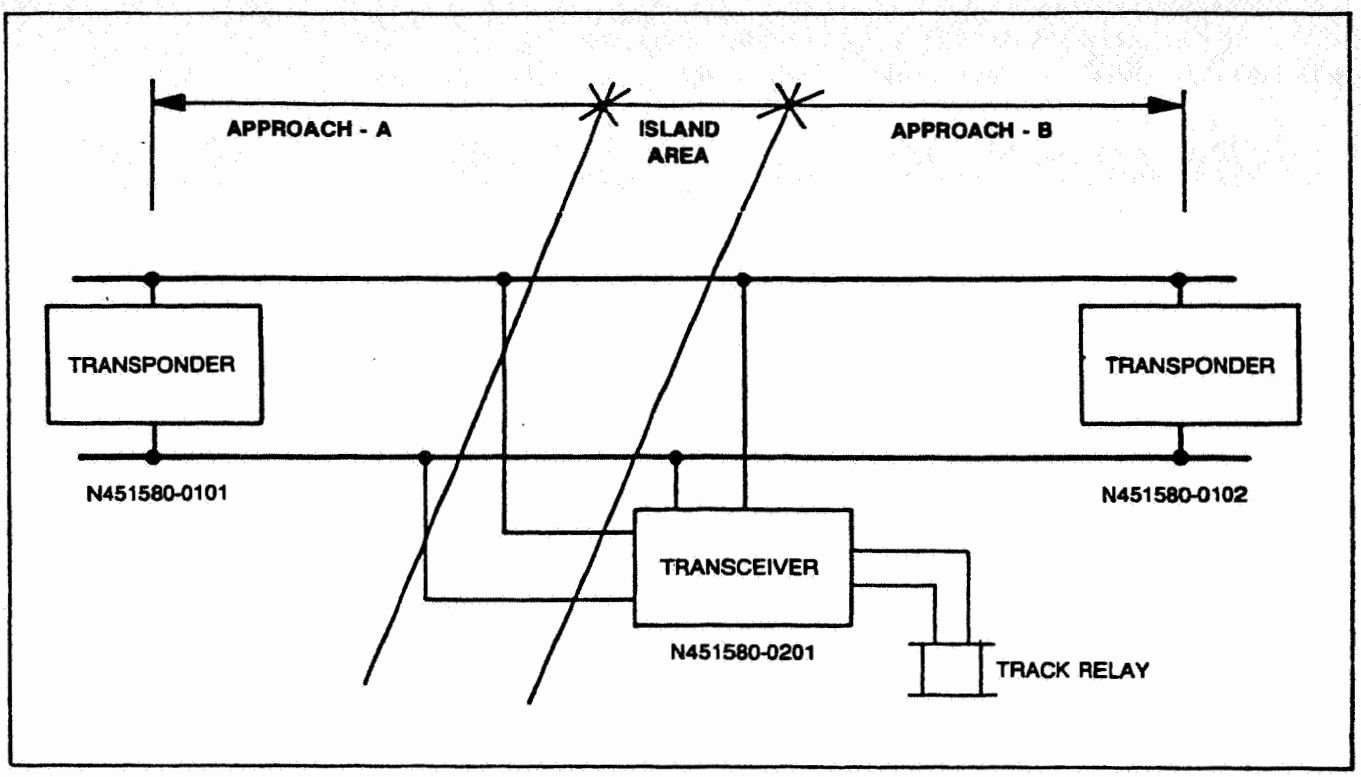

Figure 4-5. High Frequency Track Circuit

4.3 ACTIVATION CONTROL CIRCUITS

The types of control circuits used to activate the grade crossing warning devices depend upon the specific application. Control circuits can be designed for the very basic grade crossing, or for the very complex; for example, overlapping track circuits. Because the control circuits are designed for specific applications, it is not practical to cover them in this manual. A typical grade crossing control circuit is shown in Figures 4-6. For specific control circuits, refer to the circuit diagrams for the particular installation.

4.4 POWER REQUIREMENTS

When two sources of power are provided in a local control case and approach end case, storage battery capacity is maintained at all times with a 4.5 ampere automatic battery charger operated by commercial power. If commercial power fails, the battery charge is suspended and the entire system is operated from standby battery until power is restored. AFO approach end cases are also designed for operation with primary batteries where commercial ac power is not available.

Type "C" track circuits are operated with low voltage ac output from an inverter. The inverter will also invert dc to ac in conjunction with a power off transfer relay and standby battery during power outage.

Control equipment normally operates from a 10 Vdc or 12 Vdc power supply. dc "area warning" and "island" track circuits use separate power supplies.

4.5 FUNCTIONAL OPERATION

Although there are many different control schemes possible, the principles of operation are basically the same. The description that follows cover a typical control scheme using Audio Frequency Overlay equipment. This functional description can be applied to systems using other types of train detection equipment; the differences primarily being in the train detection equipment itself.

Simply put, operation of a grade crossing warning system is basically controlled by the train detection and the warning activation circuits. The train detection circuit indicates the presence of a train in the controlled area. The warning activation circuits initiate the operation of the warning devices (flashing lights, gates, bells). When the train leaves the controlled area, the warning circuits are deactivated.

A typical audio frequency overlay (AFO-IIC) track circuit is shown in Figure 4-6. In this example, audio frequency overlay (AFO-IIC) track circuits are used for approaches in either a southbound or northbound direction for each track in the normal direction of traffic. They are designated SOT and NOT (southbound and northbound overlay track), and each have an assigned frequency with a separate transmitter and receiver. Island circuits at grade crossing intersections designated SXOT and NXOT (southbound and northbound crossing overlay track) utilize an ATT-20 transceiver with an assigned frequency.

The block diagram shown in Figure 4-6 illustrates circuit interaction for a typical grade crossing location containing a gate mechanism with gate lights, flashing mast-mounted signal lights and warning bell. Each block represents a functional circuit. The arrow-tipped lines between blocks are transfers of information from one circuit to another. These transfers are accomplished via relay contact openings and closures. The designated relay coils are contained in the circuit originating the transfer. For example, the Warning Activation Circuit conditions the status of the Crossing Relay (XR). Contacts of the normally energized XR relay are then used in the various warning circuits. Therefore, the warning activation/deactivation sequence is controlled by the status of the (XR) relay. For example, as long as there is no occupancy of track circuits in the southbound or northbound approach (SOT and NOT track relays energized), and no occupancy of island track circuits (SXOT and NXOT track relays energized), the XR relay is kept in its energized state preventing warnings from activating.

Typical designations and functions of the relays used are given in Table III. The designations are those found in AAR specifications on signaling. A typical track circuit diagram with a list of components is shown in Figure 4-7.

4.5.1 Audio Frequency Overlay (AFO) Train Detection

Each Grade Crossing Warning System location provides the capability to automatically initiate warning (gate driven to horizontal position, bell and flashing lights activated) with the presence of a train in one or more of the location's approach track circuits.

Table III. Relay Functional Designations

Designation	Function
SXOTR	Southbound Crossing Overlay Track Relay
SOTR	Southbound Overlay Track Relay
NXOTR	Northbound Crossing Overlay Track Relay
NOTR	Northbound Overlay Track Relay
XR	Crossing Relay
SGP	Crossing Gate Repeater Relay
XP	Crossing Repeater
EO	Element On Relay (Flasher)

AFO-IIC track circuits designated with an assigned frequency and having separate transmitter and receiver are used for approaches in a northbound or southbound direction. Island track circuits at grade crossing intersections utilize an ATT-20 transceiver, and are also designated with an assigned frequency.

Regardless of type, each track circuit, when unoccupied, energizes an associated track relay. When a train enters the track circuit, signal strength is shunted away from the associated track circuit receiver, resulting in the deenergization of the track relay. Each track relay utilized for grade crossing warning approach circuits can be identified by its assigned transmission/reception frequency, i.e. OTR for AFO-IIC track circuits and XOTR for ATT-20 track circuits.

4.5.2 Warning Activation

The Warning Activation Circuit provides for automatic or manual activation and deactivation of grade crossing warnings. When under automatic control, occupancy of approach and island track circuits determines the status of the Warning Activation (XR) Relay. When warnings are deactivated (gate in vertical position, lights and bell off), the XR relay is energized via contacts of energized approach (OTR) and island track relays (XOTR). Upon occupancy of an approach track circuit, the XR deenergizes, initiating warnings, and remains deenergized until the originating approach track circuit and the island track circuit are unoccupied.

4.5.2.1 Flashing Warning Lights

Flashing warning lights commence upon deenergization of the XR relay, and in turn, the Crossing Gate Repeater (XGP) Relay. When this occurs, ac power is applied via contacts of an energized Element On (EO) Relay, (flasher relay) to alternately flash gate lights, and mast- or cantilever-mounted signal lights. The signal lights continue to flash until the island track circuit has been passed by the train, and the gate is driven to its deactivated vertical position.

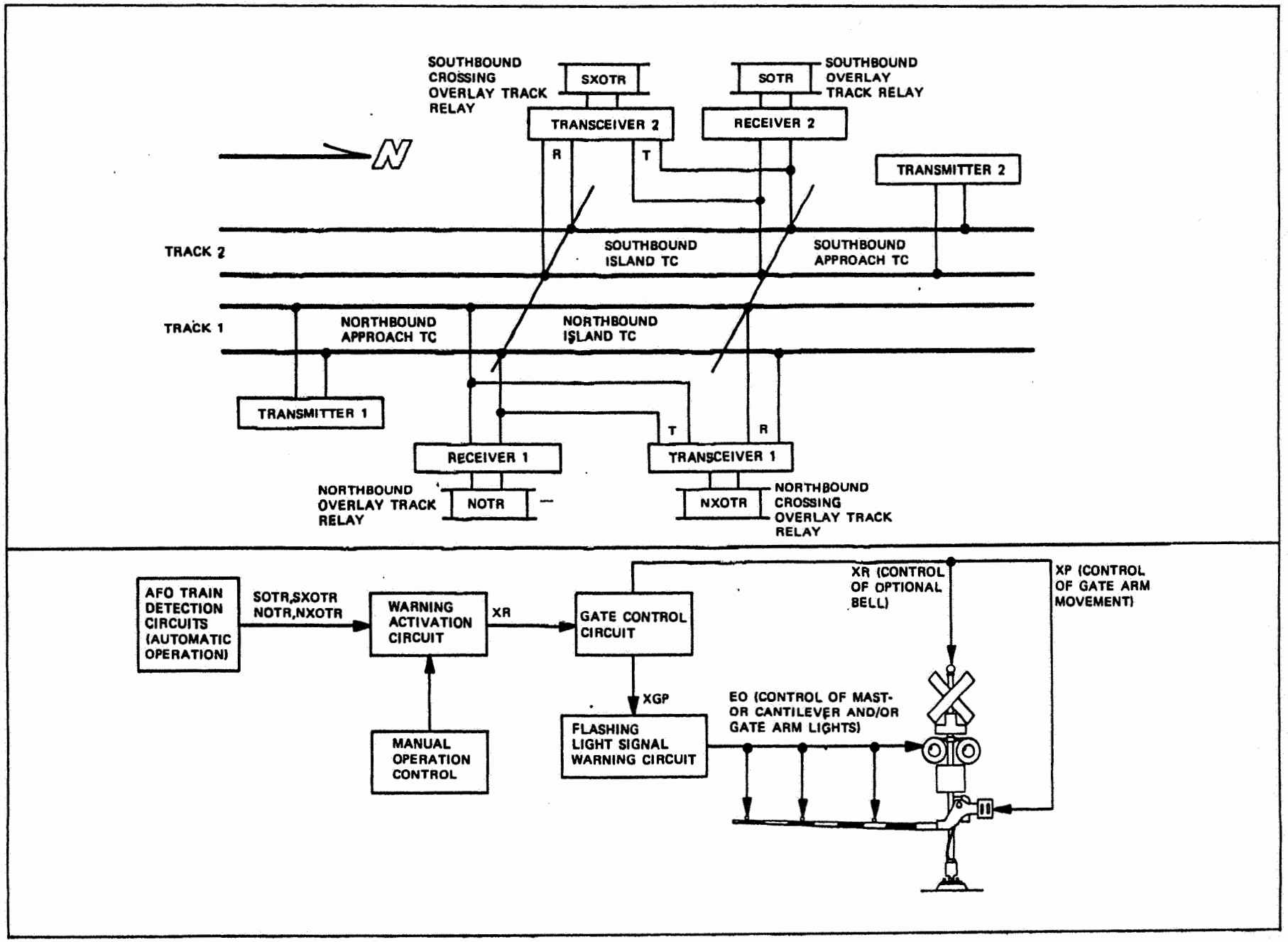

Figure 4-6. Typical Grade Crossing Warning Control Scheme Using Non-Overlapping AFO Track Circuits (Normal Direction Running)

UNION SWITCH & SIGNAL

4.5.2.2 Gate Activation

Deenergization of the XR, and in turn, the Crossing Repeater (XP) Relay causes the internal gate mechanism circuits to drive the gate to a horizontal position. Deactivation (XR relay reenergizes) initiates gate drive up to the vertical 90 degree position once the island track circuit has been passed by the train.

4.5.2.3 Warning Bell

Deenergization of the XR causes the crossing warning bell to activate. Bell shutoff is controlled by the movement of the gate arm during drive down via an adjustable cam controlled contact of the gate mechanism's circuit controller.

4.5.3 Warning Activation by Manual Operation Control

Each grade crossing location can contain a provision in the control circuits to effect activation without occupancy of approach or island track circuits. A normally closed pushbutton circuit in series with the coil energizing path to the XR relay can be utilized for this function (as shown in Figure 4-6).

4.5.4 Optional Control and Timing Applications

When required, control circuits can be modified to satisfy design criteria within a grade crossing subsystem or system. The following paragraphs describe some of these applications.

4.5.4.1 Signaling System Tie-In

Track circuits ordinarily used for train detection within interlocking and/or automatic block signaling subsystems can be used in conjunction with grade crossing warning track circuits, and provide an additional means of initiating warning activation and/or deactivation. Line control circuits between crossing locations containing contacts of grade crossing and signaling system track relays can provide varying warning times (elapsed time between warning activation and occupancy of the island track circuit), and protection against AFO (or similar type) track circuit failure. In the event of warning activation upon grade crossing warning track relay failure, timing circuits can be configured to deactivate warnings after a predetermined time delay to allow the gate to rise and flashing signal lights to go dark and avoid unnecessary vehicular or pedestrian traffic buildup.

4.5.4.2 Reverse Traffic Direction Warning Activation

Circuits can also be configured to accommodate reverse as well as normal traffic direction approaches to a grade crossing warning location. If this were the case, warning activation would commence upon occupancy of the approach track circuit for a normal direction running track, and upon occupancy of the island track circuit (slowed or stopped train) or an additional approach track circuit for a reverse direction running track. Warning deactivation would commence upon vacancy of the island track circuit for either direction of traffic.

SECTION V
MAINTENANCE

5.1 GENERAL

The maintenance procedure provided in this manual are limited to field maintenance. Maintenance procedures beyond the scope of this manual, and shop maintenance, are covered in the applicable equipment manuals. Procedures covered in this section include preventive maintenance, troubleshooting, and corrective maintenance.

5.2 PREVENTIVE MAINTENANCE

Preventive maintenance consists of routine cleaning, inspection, and operational tests. Proper preventive maintenance will help to assure continued uninterrupted operation of the Grade Crossing Warning System. The procedures and intervals are those recommended by Union Switch & Signal. Actual procedures and intervals depend on the customers own operation and past experience.

Table IV lists the maintenance actions to be performed and recommended frequency. Ideally, perform all procedures that are due at the same time. For example, if cleaning and inspection fall at six month intervals, these procedures should be performed together.

5.2.1 Cleaning

Cleaning consists of the removal of dust and dirt from the control equipment (located in the instrument case), dirt and grime from the flashing light units, and internal cleaning of the gate mechanism.

5.2.1.1 Equipment/Materials Required

a. Lint-free cloths
b. Soft bristle brush
c. Compressed air in aerosol can
d. Cleaning solvent
e. Commercial cleaning detergent

5.2.1.2 General Cleaning Procedures

WARNING

HAZARDOUS VOLTAGES AND CURRENT MAY BE PRESENT. EXERCISE EXTREME CARE WHEN WORKING AROUND EXPOSED TERMINALS. NEVER USE WET CLOTHES NEAR EXPOSED ELECTRICAL TERMINALS.

a. Remove dust and dirt from the surface of the components mounted in the equipment case and inside the gate mechanism housing with a soft bristle brush. Blow out dust and dirt from hard to reach areas with compressed air in aerosol can.

Table IV. Maintenance Action

Frequency	Action
Every 30 days	Perform a systems operation test per paragraph 5.3.
Every 6 months	Clean and inspect all grade crossing equipment per paragraphs 5.2.1 and 5.2.2.
	Lubricate gate mechanism per paragraph 5.2.3.
Every 12 months	Vital flasher relays performance test per applicable service manual.
Every 24 months	All vital track and control relays performance test per applicable service manuals.

b. Remove accumulation of heavy dirt and grime with a lint-free cloth dampened in a detergent solution. Dry with clean cloth.

c. With a cloth dampened in an approved solvent, wipe clean the gate mechanism circuit control, motor control relay contacts, and hold clear amature of any oil, and dirt that may have accumulated during operational service.

d. Flashing Light Units

1) Clean glass roundels and glass reflectors with a clean cloth moistened with a detergent solution. Wipe dry. Use an approved solvent for hard to remove dirt or grease.

2) Clean plastic roundels by flushing with clean water, using a chamois or soft cloth. Use a detergent for hard to remove dirt.

CAUTION

Do not use any solvents on plastic roundels.

3) Remove dirt from hoods and background with a damp cloth moistened in a detergent solution.

5.2.2 Inspection

Inspect the equipment for damaged parts, etc. in accordance with the following paragraphs. Any parts found to be damaged during inspection should immediately be repaired or replaced. Refer to Section VII, Corrective Maintenance.

5.2.2.1 Grade Crossing Equipment

a. Broken or cracked light unit roundel and/or reflector.

b. Broken light unit case, door, or other parts. Damaged lamp receptacle.

c. Faulty or damaged door gasket which would result in water leaking into the case.

d. Burned out or broken light unit or gate arm lamps.

e. Broken or cracked lens on gate arm lights.

f. Broken or cracked gate arms.

g. Damaged mast and/or signs, or other equipment.

h. Exterior damage to gate mechanism signs of vanadalism.

i. Interior of gate mechanism for the following:

1) All wiring connections are tight; wiring is free from cuts, nicks, and fraying.

2) Damage to gears, motor, cams and contacts.

3) Secure mounting of components.

4) Contacts for proper opening (refer to SM6043).

5) Slide contacts on resistors are clean and are bearing on the resistor windings with firm pressure. Lockscrew securing the slide contact should be tight.

5.2.2.2 Control Equipment

a. Check control case exterior for any signs of physical damage or of vandalism (such as bullet holes). Check for water leaks inside the case.

b. Check batteries for fluid and specific gravity. Remove all corrosion to assure proper voltage and battery charging.

c. Check for loose or damaged electrical connections.

d. Check for loose or damaged components.

e. Check for wiring for burned, frayed, or damaged insulation.

f. Check track circuit cabling for secure connections to track and damage such as kinks, cuts, etc.

g. Check for insulated joints (if applicable) for damage or deterioration.

h. Check relays for:

1) Cracked or broken cover; broken seals.

2) Pitted or damaged contacts; contact misalignment.

3) Corrosion or other contamination of relay components; loose parts inside cover.

5.2.3 Lubrication

The only equipment requiring lubrication is the gate mechanism. Every six months, or more frequently depending on operating conditions, apply a light brush coat of lubricant to the gear teeth and circuit controller cam. Texaco Regal Starfax #2 (MIL-G-3278) VA4830 grease, or equivalent is recommended. The mechanism gear shaft and main shaft bearings are pre-lubricated and double sealed at the factory and requires no lubrication in the field.

5.3 SYSTEM OPERATIONAL TEST

NOTE

More frequent operating tests should be made in areas where the system is seldom or only periodically used. Where the system is in use daily, a visual observation of the system should suffice until normal periodic testing.

Keep test records for handy referral so that proper checks are made at regular intervals.

Every 30 days perform the operational test covered in paragraph 3.8.2. Observe the operation for any signs of malfunctioning or faulty operation. Initiate corrective action if any faults are observed.

5.4 TROUBLESHOOTING

5.4.1 Table V covers the more common problems encountered in system operation. Faulty operation generally will occur in three major areas:

1) Train detection circuits,

2) Activation control circuits, and

3) Gate mechanism.

Table V. Troubleshooting

Problem	Cause	Remedy
1. Erratic or malfunctioning gate arm operation; warning system operating properly.	Improper gate mechanism adjustments.	Refer to gate mechanism SM6043.
2. Gate arm remains down when track is unoccupied.	Open motor-up circuit.	Refer to gate mechanism SM6043.
3. Gate in horizontal position with other warnings not activated.	Loss of primary ac and dc power (common source)	Check distribution of primary ac power to signal lighting transformer and dc rectifier. Check transformer and rectifier.
	Open gate fuse	Check fuse for continuity. If required, replace with identical fuse.
4. Gate in horizontal position with steady lit gate and signal lights.	Loss of dc power	Check distribution of dc power to control relays. Check power supply or rectifier.
	Malfunctioning flashing signal lighting circuit.	Check operation of flashing signal lighting circuit (specifically, the flasher relay and distribution of ac to signal lighting lamps).
5. Control system activated; gate and signal lights malfunctioning (not flashing, one side not lit, etc.)	Malfunctioning flashing signal lighting circuit.	Check operation of flashing signal lighting circuit (specifically, the flasher relay). Check lamps.

Table V. Troubleshooting (Cont'd.)

Problem	Cause	Remedy
6. Activation of warnings with no occupancy; flashing lights on gate down.	Train detection equipment failure (one or more track relays deenergize resulting in warning control relay deenergizing).	Refer to applicable train detection manual. Check relays.
	Open in energizing path to warning control relay resulting in deenergization.	Check continuity of energizing path to warning control relay.
	Open in manual activation circuit.	Check operation of manual activation circuit.
	Malfunction relay in activation circuit.	Check relays.
7. System remains activated after train leaves control areas; flashing lights on, gate remains down.	Malfunctioning detection equipment.	Troubleshoot detection circuit/equipment and correct. Check relays. Replace if faulty.
	Malfunctioning activation equipment.	Troubleshoot activation circuits/equipment and correct. Check relays. Replace if faulty.
8. Gate goes up; flashing lights remain on with no occupancy.	Malfunctioning lighting control circuits.	Troubleshoot control circuit/equipment and correct. Check relays. Replace if faulty.
9. Flashing lights go dark; gate remains down with no occupancy.	Malfunctioning gate control circuit.	Troubleshoot control circuit/equipment and correct. Check relays. Replace if faulty.

5.5 CORRECTIVE MAINTENANCE

Corrective maintenance consists of repairing or replacing damaged or faulty components or equipment. In general, most items can be replaced in the field to restore the system to full operation. This would include control equipment such as relays, rectifiers, transformers, and detection equipment. Minor repairs can also be done in the field such as replacing roundels, lamps, damaged signs, broken gate arms, etc. Items requiring major repair should be returned to the shop such as:

a. Gate mechanism for damage to gears, contacts, cams, motor, clutch, etc.

b. Relays for broken covers, damaged or misaligned contacts.

c. Light units for broken reflector, lamp receptacle, case and case door.

d. Train detection unit if it does not meet minimum performance standards and cannot be brought into specification through normal adjustments.

SECTION VI
REPLACEMENT PARTS

6.1 GENERAL

For detail parts of the major components, refer to the applicable service manual listed in Table I. For parts and equipment associated with a specific installation, refer to the applicable drawings (see Figure 4-7 for an example). Miscellaneous parts information for signs, bases, etc. are covered in the following catalog sections included in this section:

Grade Crossing Masts	RSE-10B1
Junction Box Bases	RSE-10B2
Grade Crossing Signs	RSE-10B3

6.2 REPLACEMENT LAMPS

For convenience, replacement lamps for the flashing light units and the gate arm lights are listed below:

a. Flashing Light Units and Gate Arm Lights

10 Volt - 18W	S.C.B.C. Base	J071463
10 Volt - 25W	S.C.B.C. Base	J071574
110 Volt - 25W	S.C.B.C. Base	J714054

a. Flashing Light Units Only

10 Volt - 16W	Quartz Iodide	J714283
10 Volt - 36W	Quartz Iodide	J714284

GRADE CROSSING MASTS

U S & S masts are constructed of aluminum for easy handling, long life, and minimum maintenance. The 13' 6" mast is used for mounting grade crossing signals, signals with gate assemblies, or gate assemblies, only. A 6' 9" stub mast is available for mounting U S & S's gate mechansim with gate arm. The 15' 3" mast is designed for converging highway applications. An additional hole is drilled at appropriate angle from the center to accommodate additional crossarms.

4 AND 5-INCH GRADE CROSSING ALUMINUM SIGNAL MASTS

(FOR USE WITH 17" HIGH JUNCTION BOX BASES WITH 11-11/16" BOLT SPACING)

CONVERGING ANGLE

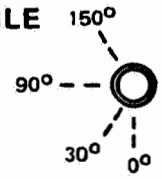

ORDERING INFORMATION

PART NO.	MAST DIA.	MAST HEIGHT	J.B. BASE HOLE	J.B. CROSSARM HOLE	CONVERGING CROSSARM HOLE	NOTES
M451394-4301	4"	6'9"	0°	–	–	
M451394-4201	5"	6'9"	0°	–	–	
M451394-4401	4"	13'6"	0°	0°	–	
M451394-3902	5"	13'6"	0°	0°	–	
M451394-4101	4"	15'3"	0°	0°	–	
M451394-4001	5"	15'3"	0°	0°	–	
M451394-4102	4"	15'3"	0°	0°	30°	
M451394-4002	5"	15'3"	0°	0°	30°	
M451394-4103	4"	15'3"	0°	0°	90°	
M451394-4003	5"	15'3"	0°	0°	90°	
M451394-4104	4"	15'3"	0°	0°	150°	
M451394-4004	5"	15'3"	0°	0°	150°	

4-INCH GRADE CROSSING ALUMINUM SIGNAL MASTS

(FOR USE WITH 12" HIGH JUNCTION BOX BASE WITH 9-1/2" BOLT SPACING)

ORDERING INFORMATION

PART NO.	MAST DIA.	MAST HEIGHT	J.B. BASE HOLE	J.B. CROSSARM HOLE	CONVERGING CROSSARM HOLE	NOTES
M451394-5101	4"	13'6"	0°	0°	–	
M451394-5102	4"	15'3"	0°	0°	90°	

PINNACLE AND APPLICATION HARDWARE

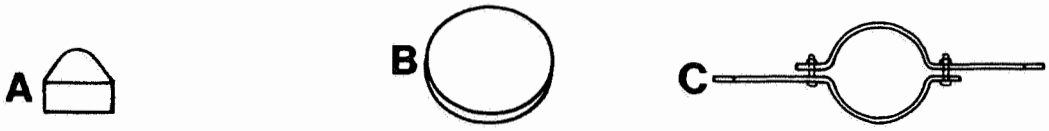

ORDERING INFORMATION

REF.	PART NO.	DESCRIPTION	NOTES
A	J026104	PINNACLE for 4" diameter mast	
A1	J026111	PINNACLE for 5" diameter mast	
B	M451195-3601	RODENT COVER PLATE for 4" diameter mast	
B1	M451195-3602	RODENT COVER PLATE for 5" diameter mast	
C	N199590	STEP, GALVANIZED, includes mounting hardware	

JUNCTION BOX BASES FOR 4-AND 5-INCH MASTS

U S & S junction box bases are constructed of aluminum for easy handling, long life, and minimum maintenance. They provide for terminating leads at the mast base. These junction box bases facilitate installation and maintenance.

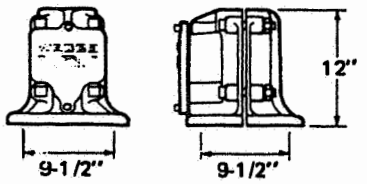

A

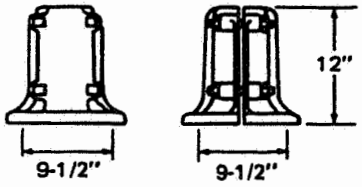

B

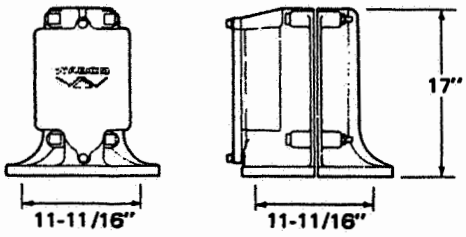

C/C1

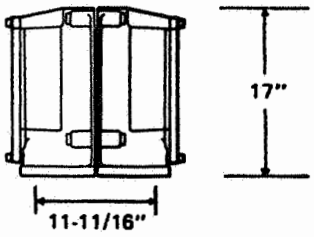

C2

REF.	PART NO.	MAST DIA.	FDN. BOLT SPACING	BASE HEIGHT	NO. TERM.	NOTES
A	J705049-0201	4"	9-1/2 "	12"	12	Not For Use With Gates
B	J705049-0203	4"	9-1/2"	12"	None	Plain Clamp Base
C	J705049-0602	4"	11-11/16"	17"	24	
C1	J705049-0801	5"	11-11/16"	17"	24	
C2	J705049-0901	5"	11-11/16"	17"	48	

For FOUNDATION BOLTS see RSE-10F1.

GRADE CROSSING SIGNS

U S & S grade crossing warning signs are made of aluminum and include all hardware necessary for mounting. Signs can be ordered in engineering grade Scotch-Lite® or Hi-Intensity reflex-reflection. U S & S signs conform to AAR requirements.

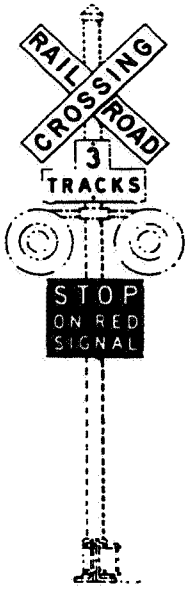

"RAILROAD CROSSING" SIGN

All aluminum construction with black lettering and includes mounting hardware.

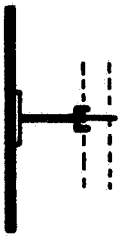

STANDARD

PART NO.	MAST SIZE	BACKGROUND
X392931-001	4"	Engineering Grade
X392931-007	4"	Hi-Intensity
X392931-002	5"	Engineering Grade
X392931-008	5"	Hi-Intensity
X392931-005	10" (Pipe Mast)	Engineering Grade
X392931-009	10" (Pipe Mast)	Hi-Intensity
X451506-0711	10/11" (Tapered Mast)	Engineering Grade
X451506-0712	10/11" (Tapered Mast)	Hi-Intensity

WITH STAND-OFF for Wooden Gate Arms

PART NO.	MAST SIZE	BACKGROUND
X438002-002	4"/5"	Engineering Grade
X438002-003	4"/5"	Hi-Intensity

"TRACKS" SIGN

Specify number required. All aluminum construction with black lettering and includes mounting hardware.

STANDARD

PART NO.	MAST SIZE	BACKGROUND
X392929-001	4"	Engineering Grade
X392929-005	4"	Hi-Intensity
X392929-002	5"	Engineering Grade
X392929-006	5"	Hi-Intensity
X392929-004	10" (Pipe Mast)	Engineering Grade
X392929-007	10" (Pipe Mast)	Hi-Intensity
X451506-0714	10/11" (Tapered Mast)	Engineering Grade
X451506-0715	10/11" (Tapered Mast)	Hi-Intensity

WITH STAND-OFF for Wooden Gate Arms

PART NO.	MAST SIZE	BACKGROUND
X437997	4"/5"	Engineering Grade
X437997-001	4"/5"	Hi-Intensity

"STOP ON RED SIGNAL" SIGN

All aluminum construction with black background. Includes mounting hardware.

STANDARD

PART NO.	MAST SIZE	LETTERING
X392930-001	4"	Engineering Grade
X392930-005	4"	Hi-Intensity
X392930-002	5"	Engineering Grade
X392930-006	5"	Hi-Intensity
X392930-004	10" (Pipe Mast)	Engineering Grade
X392930-007	10" (Pipe Mast)	Hi-Intensity
X451506-0720	10/11" (Tapered Mast)	Engineering Grade
X451506-0721	10/11" (Tapered Mast)	Hi-Intensity

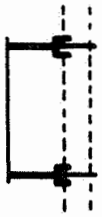

WITH STAND-OFF for Wooden Gate Arms

PART NO.	MAST SIZE	LETTERING
X438077	4"/5"	Engineering Grade
X438007-001	4"/5"	Hi-Intensity

STAND-OFF BRACKETS (Includes hardware.)

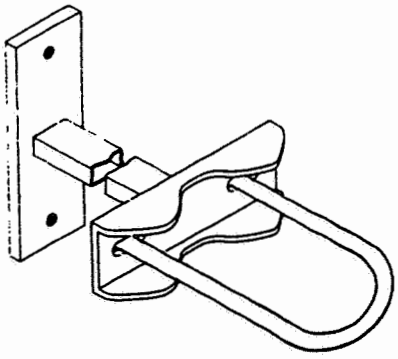

4"/5" MAST

PART NO.	SIGN
N438004-001	"Railroad Crossing"
N437999	"Tracks"
N438078	"Stop On Red Signal"

10"/11" MAST

PART NO.	SIGN
X451506-0710	"Railroad Crossing"
X451506-0713	"Tracks"
X451506-0719	"Stop On Red Signal"

SERVICE MANUAL 6043

Operation, Installation and Maintenance

MODEL 75

Grade Crossing Gate Mechanism

UNION SWITCH
& SIGNAL INC.
A member of the ANSALDO Group

5800 CORPORATE DRIVE
PITTSBURGH, PA 15237

June, 1984 (Rev. 3/87)
ID0070D/DN0016D
C-9/89-75-2048-7

COPYRIGHT 1989, UNION SWITCH & SIGNAL INC
PRINTED IN USA

CONTENTS

Section		Page
I.	GENERAL INFORMATION	1-1
1.1	INTRODUCTION	1-1
1.2	DESCRIPTION	1-2
1.2.1	Model 75 Gate Mechanism Configurations	1-2
1.2.1.1	Component Descriptions	1-2
1.2.2	Gate Arms	1-5
1.2.3	Gate Arm Support Brackets and Counterweights	1-5
1.2.3.1	Telescoping Gate Arm Support Bracket	1-5
1.2.3.2	Wood Gate Arm Support Bracket	1-5
1.2.3.3	Counterweights	1-6
II.	INSTALLATION	2-1
2.1	INTRODUCTION	2-1
2.2	ELECTRICAL APPLICATION GUIDELINES	2-1
2.3	INSTALLATION PROCEDURE	2-1
2.3.1	Mast, Junction Box Base, Lights, and Sign Installation	2-1
2.3.2	Model 75 Gate Mechanism Installation	2-5
2.3.3	Gate Arm Assembly and Installation	2-6
2.4	ADJUSTMENTS	2-11
2.4.1	Gate Arm-Lateral Adjustment	2-11
2.4.2	Torque Adjustment - Horizontal and Clear Positions	2-11
2.4.2.1	Horizontal Position Torque Measurement	2-12
2.4.2.2	Horizontal Position Torque Adjustment	2-12
2.4.2.3	Clear Position Torque Measurement	2-13
2.4.2.4	Clear Position Torque Adjustment	2-13
2.4.3	Horizontal Arm Adjustment	2-13
2.4.4	Cam Adjustment	2-13
2.4.5	Adjustment of Descending and Clearing Time	2-14
2.4.6	Hold Clear (Electric Brake) Air Gap Adjustment	2-14
2.4.7	Operation of Gate Arm Lights	2-16
2.5	GATE ARM REPLACEMENT	2-16
2.5.1	Gate Arm Cranking Procedure	2-16
2.6	Motor Thermal Protection Wiring	2-18
III.	OPERATIONAL DESCRIPTION AND TROUBLESHOOTING	3-1
3.1	INTRODUCTION	3-1
3.2	OPERATIONAL DESCRIPTION	3-1
3.3	TROUBLESHOOTING	3-2
IV.	MAINTENANCE	4-1
4.1	INTRODUCTION	4-1
4.2	PREVENTIVE MAINTENANCE	4-1
4.2.1	Inspection and Cleaning	4-1
4.2.2	Lubrication	4-1
4.2.3	Circuit Controller and Control Adjustment	4-1
4.2.4	Snubbing and Limiting Resistor Contact Check	4-2
4.3	PARTS REPLACEMENT/REPAIR	4-2

CONTENTS Cont'd.

Section		Page
4.4	TOOL LIST	4-2
4.4.1	Torque Measurement Tools	4-2
4.4.2	Gate Mechanism Cranking Tools	4-2
4.4.3	Bumper Stop Adjustment Tools	4-2
4.4.4	Cam Adjustment Tool	4-2
4.4.5	Hold Clear Armature Air Gap Adjusting Tool	4-3

TABLES

Table 1-1	Gate Mechanism Specifications	1-4
Table 3-1	Troubleshooting Chart	3-2

ILLUSTRATIONS

Figure 1-1	Grade Crossing Gate Assembly with Model 75 Gate Mechanism	iii/iv
Figure 1-2	Internal Components of Model 75 Gate Mechanism	1-3
Figure 2-1	Ten Second Gate Arm Clearing Graph	2-2
Figure 2-2	Fifteen Second Gate Arm Clearing Graph	2-3
Figure 2-3	Twenty Second Gate Arm Clearing Graph	2-4
Figure 2-4	Telescoping Gate Arm Support Bracket	2-8
Figure 2-5	Wood Gate Arm Support Bracket	2-8
Figure 2-6	Installation of Telescoping Gate Arm in Support Bracket	2-10
Figure 2-7	Torque Measurement	2-12
Figure 2-8	Hold Clear Armature Air Gap Measurement	2-15
Figure 2-9	Manual Cranking of Model 75 Crossing Gate Mechanism	2-17
Figure 3-1	Wiring Diagram of Model 75 Gate Mechanism with Integral Gate Control Relay (GCR)	3-4
Figure 3-2	Wiring Diagram of Model 75 Gate Mechanism without Integral Gate Control Relay (GCR)	3-5

APPENDIX A - PARTS LISTS/DIAGRAMS

Figure A-1	Model 75 Gate Mechanism N451484-0101 thru -0106; N451484-2101 and 2202	A-1/A-2
Figure A-2	Circuit Controller N451484-2201 and -2202	A-7/A-8
Figure A-3	Components for Grade Crossing Gate Assemblies with Model 75 Gate Mechanism	A-11/A-1
Figure A-4	Telescoping Aluminum and Fiberglass Combination Gate Arms	A-13/A-1
Figure A-5	Support Brackets for Telescoping and Wood Gate Arms	A-15/A-1
Figure A-6	Grade Crossing Gate Assembly with Model 75 Gate Mechanism and Telescoping Gate Arm	A-17/A-1
Figure A-7	Grade Crossing Gate Assembly with Model 75 Gate Mechanism & Telescoping Gate Arms for Converging Highway Applications	A-19/A-2
Figure A-8	Grade Crossing Gate Assembly with Model 75 Gate Mechanism	A-21/A-2
Figure A-9	Grade Crossing Gate Assembly with Model 75 Gate Mechanism & 39'-44' Wood Gate Arms for Converging Highway Applications	A-23/A-2
Figure A-10	Stub Mast Crossing Gate Assembly with Model 75 Gate Mechanism & Telescoping Gate Arms	A-25/A-

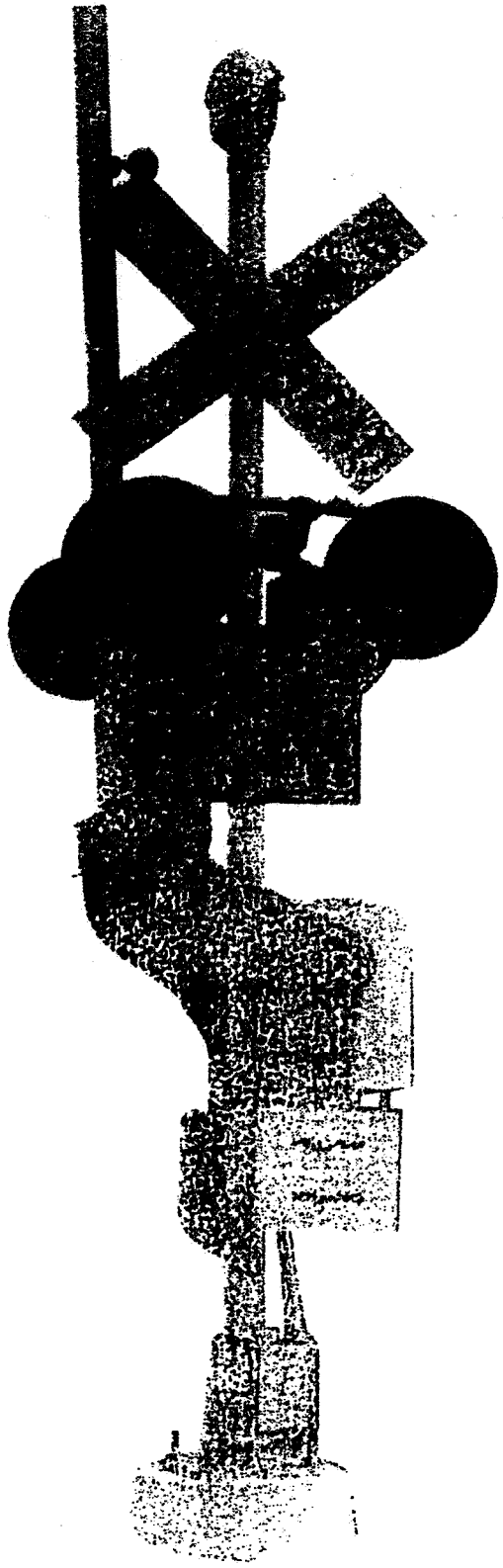

Figure 1-1. Grade Crossing Gate Assembly
with Model 75 Gate Mechanism

SECTION I
GENERAL INFORMATION

1.1 INTRODUCTION

The Model 75 Gate Mechanism, with gate, is designed to provide additional grade crossing warning. A US&S Grade Crossing Assembly using the Model 75 Gate Mechanism is shown in Figure 1-1. The mechanism is capable of operating aluminum, fiberglass or wood arms up to 40 feet.

While most of this manual is devoted to the description, installation, and maintenance of the Model 75 Gate Mechanism, information covering the telescoping gate arms and the gate arm support/counterweight combination is also included.

Several features have been designed into the Model 75 Gate Mechanism to facilitate maintenance. Gate arm torque can be measured with a torque wrench, directly from the gate mechanism motor shaft. For gate arm replacement, the gate mechanism can be manually cranked with ratchet wrenches to lower the gate arm. The gate mechanism can also be cranked to raise the gate arm manually. A power cut-out link is provided to cut off electrical power to the gate mechanism without interrupting power to the gate arm lights, mast mounted flashing lights, or warning bell. Another feature is the telescoping gate arm adapter bracket. This enables an aluminum or fiberglass combination gate arm to be laterally adjusted for clearance of overhead obstructions and flashing light signal backgrounds when the gate arm is in the clear position.

The aluminum and fiberglass gate arms are available from 17 to 40 feet in three ranges. The shortest configuration provides lengths ranging from 17 feet to 27 feet, the second from 28 feet to 33 feet, and the longest from 34 feet to 40 feet. All are adjustable in one foot increments. Different counterweight arrangements and shear pins are available for each of the three ranges.

Gate arm support brackets are available for telescoping aluminum or fiberglass gate arms or for wood gate arms. The steel support bracket for the telescoping aluminum or fiberglass gate arms features a shear pin which enables the gate arm to break free of the mechanism if it is struck by an on-coming vehicle.

After April 1, 1987, all Model 75 Gate Mechanisms will have motors that are equipped with internal thermal protection. Two models of the mechanism have the thermal protection factory-wired in the motor control circuit. All the remaining models are supplied with a thermal wiring kit that provides the option for connecting the thermal protection into the motor control relay circuit.

To protect against corrosion, all hardware exposed to the elements is stainless steel, brass, or aluminum.

1.2 DESCRIPTION

1.2.1 Model 75 Gate Mechanism Configurations

The Model 75 Gate Mechanism is available in various configurations. They include with or without vital and non-vital relay, heaters, etc. Refer to Figure A-1 tabulation for details.

The Gate Control Relay (GCR) provides an integral means for changing the polarity of the gate motor circuit and results in the reduction of one power conductor (compared to the gate mechanism which does not employ a GCR). This version is intended for applications which are limited to two power conductors, between the gate mechanism and its associated instrument housing, to operate a gate motor with drive down facility. The Model 75 Gate Mechanism is available with either a vital or a non-vital internal GCR.

For a gate mechanism without an internal GCR, the gate motor control logic relays are all located externally in an associated instrument housing. This version is recommended for applications in which three power conductors are available between the gate mechanism and its associated instrument housing to operate a gate motor with drive down facility.

All motors furnished after April 1, 1987, will have two 1/4"-20 terminal posts on the motor frame for wiring the new internal thermal switch to the coil of the motor control relay.

1.2.1.1 Component Descriptions (see Figure 2-1)

Structurally, the gate mechanism consists of a welded aluminum housing with a cast aluminum chassis on which are mounted the internal components of the mechanism. All exposed mounting hardware is stainless steel or some other non-corrosive material such as brass, copper or monel. Internal parts are identified in Figure 1-2.

A 12 Vdc permanent magnet motor drives the main shaft through a 115:1 reduction gear train which consists of heat treated steel gears. The hold clear unit (sometimes called an electric brake) is mounted to the right of the motor and retains the gate arm in the vertical clear position.

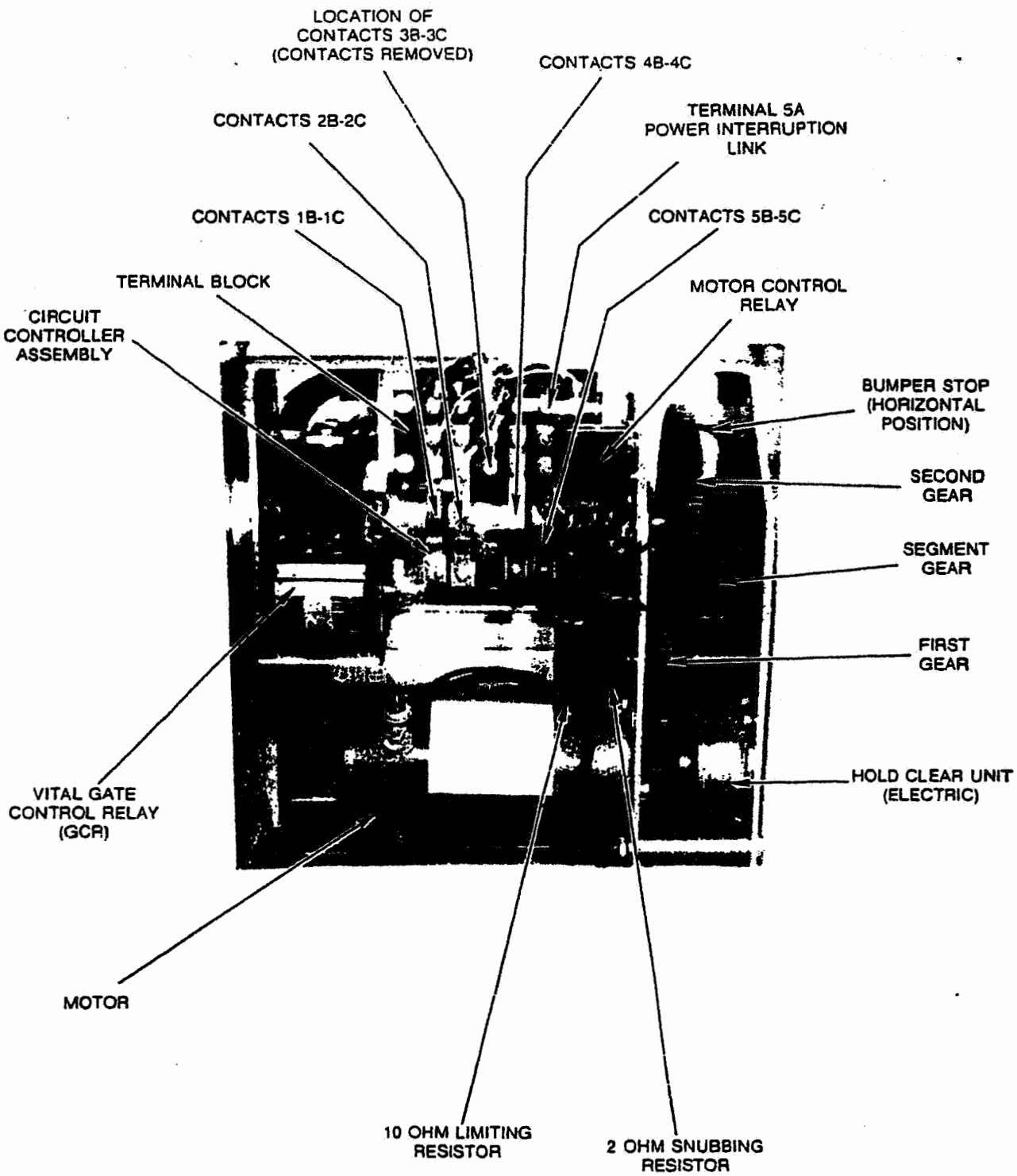

Figure 1-2. Internal Components of Model 75 Gate Mechanism

The motor control relay controls the gate motor circuit and is mounted to the left of the gear train. The Circuit Controller Assembly, mounted near the top of the mechanism, consists of cam actuated contacts. Details of the Circuit Control Assembly is shown in Figure A-3, Appendix A. Contacts 1B-1C and 5B-5C are wired for control of the gate mechanism itself. Contacts 2B-2C are usually dedicated to control of the crossing gate repeater relay (XGPR) of the highway crossing control circuits. Contacts 4B-4C control the crossing warning bell while contact 3B-3C are retained as spares or for special functions such as checking that the gate arm is down. Cams #1 and #2 (which control contacts 1B-1C and 2B-2C respectively) are interlocked and are adjustable from 70° to 93° to enable the gate arm to be adjusted from 70° to 93° in the clear position. A 2-ohm snubbing resistor and a 10-ohm limiting resistor are mounted below the motor control relay. The 10-ohm resistor limits the amount of current to the motor during the power-down portion of the descent cycle from 90° to 46°. The 2-ohm snubbing resistor is adjusted to control the non-powered gravitational portion of the descent cycle from 46° to 0° (horizontal).

The power interruption link is terminal 5A in the terminal block at the top of the mechanism. This link removes power to the mechanism itself while maintaining power to the gate arm lights, bell, and flashing light signals. Rubber bumpers cushion the gate arm assembly when it stops in the 0° (horizontal) and the 90° (vertical) positions. The bumpers are located behind the gear train. The splined ends of the main shaft extend outward from both sides of the mechanism for mounting the cast aluminum gate arm support members. To these support members are attached the counterweight and the steel gate arm support brackets. Table 1 below includes a summary of Model 75 Gate Mechanism specifications.

Table 1-1. Gate Mechanism Specifications

Weight of Mechanism	225 lbs. (Approx.)
Power Supply	12 Vdc
Nominal Current (raising)	12 Amps @ 10-12 Vdc
Inrush Current	30 Amps
Drive	Electric motor. High torque - low speed; thermal protection (optional) opens in approximately 6 minutes at 40-50 Amps. (Locked Rotor), remains open for approximately 20 minutes, continuing for more than 8 hours.
Gear Train	115:1 reduction; heat treated steel gears
Main Shaft Bearings	Pre-lubricated, factory sealed
Circuit Controller	Contact type; cam-operated, clear position adjustable from 70° to 93°
Circuit Controller Contacts	Factory adjusted; 1/16 in. opening (min); wipe, 1/64 in. (min)
Mounting	4 or 5 in. pipe masts
Arm Ascent Time	Choice of max clearing times of 10, 15 or 20 seconds at min. battery voltage
Arm Descent Time	Variable by adjusting snubbing resistor (range 8 to 15 sec.)

1.2.2 Gate Arms

Either telescoping aluminum or fiberglass combination gate arms can be provided with the Model 75 Gate Mechanism. The aluminum arm consists of 3 hexagonal shaped extruded sections. The first section of the aluminum/fiberglass combination is also an extruded aluminum piece while the remaining 2 sections are manufactured from fiberglass (pultruded glass reinforced polyester thermoset).

Both the aluminum and the fiberglass combination gate arms are available with either standard or high intensity 3M Scotchlite ® red/white reflective striping and 3 weatherproof gate arm lamps measuring either 4" or 7" in diameter. Each light is plug connected to a wiring harness mounted on the inside of the gate arm. To simplify gate arm replacement, two plug connectors have been inserted in the wiring harness: one between the first and second gate arm sections and the second between the gate arm and the gate mechanism.

These gate arms are available in 3 adjustable lengths: 17'-27', 28'-33', and 34'-40'. These lengths are measured from the center line of the mast. The part numbers for gate arms with 4" or 7" diameter gate arm lights and the part numbers for gate arms without lights are listed in Figure A-4 in Appendix A. Part numbers of individual gate arm sections, gate arm wiring harnesses, and gate arm assembly hardware are also included in the tabulation.

The total weight of the assembled gate arm with three lights is approximately 30 lbs. for the 27 foot arm, 40 lbs. for the 33 foot arm, and 48 lbs. for the 40 foot arm. The weights are approximately the same for both fiberglass and aluminum arms. Both aluminum and fiberglass arms are assembled with stainless steel hardware.

1.2.3 Gate Arm Support Brackets and the Counterweights

1.2.3.1 Telescoping Gate Arm Supports

The aluminum and fiberglass combination gate arm support is illustrated in Figure 2-4 and Figure A-5. The gate arm is mounted in the support bracket with a shear pin. The shear pin enables the gate arm to break free of the gate mechanism if the arm is struck by a vehicle. The pin also provides sufficient resistance to wind loads. The telescoping gate arm support bracket enables the gate arm to be adjusted laterally in order to clear flashing light units or overhead obstructions that may exist in the field. The gate arm can be shifted 6 inches from center in either direction in 1-inch increments.

1.2.3.2 Wood Gate Arms Support

The wood gate arms support is illustrated in Figures 2-5 and A-5. This support bracket, as is the telescoping arm support, is manufactured from steel. It is capable of accepting most wood arms up to 44 feet in length.

1.2.3.3 Counterweights

The number of counterweights required in any application depends on the type of gate arm selected (aluminum, fiberglass combination, or wood) and the length of the arm. The tabulation in the upper left corner of Figures A-6 and A-7 includes a listing of the counterweight required with each of the 3 length ranges of telescoping gate arms. Since the weight of the aluminum and fiberglass arms are equivalent the same counterweight arrangements are applicable to both. Counterweight arrangements for wood arms are listed in the upper left tabulation in Figure A-8. Note that wood gate arms longer than 30 feet require support extensions in addition to extra counterweights.

SECTION 11
INSTALLATION

2.1 INTRODUCTION

This section is divided into 5 primary parts: external electrical application data, gate mechanism and gate arm installation procedures, gate mechanism adjustment procedures, and gate arm replacement.

2.2 ELECTRICAL APPLICATION GUIDELINES

When planning a grade crossing installation, consideration must be given to the cable size and battery capacity. For this purpose three curves, Figures 2-1, 2-2, 2-3 are included in this section. These three curves are based respectively on the maximum gate arm clearing times of 10, 15 and 20 seconds relative to the minimum voltage for various cell quantities of lead acid storage battery and nickel iron/nickel cadmium storage battery. Characteristic battery cell group curves are plotted thereon to define the relationship between gate arm length and the maximum permitted resistance in series with the motor of the gate mechanism. The curves also directly relate these resistance values to the maximum distance the gate mechanism may be located from its associated power source relative to the use of #4, #6 or #9 AWG cable for its motor circuit.

The curves represent maximum gate arm clearing times relative to minimum battery cell voltages. Fully charged batteries will decrease the time it takes for the gate arm to clear. For example, a 26 foot gate arm installed on the basis of the 10 second curve of Figure 2-1 (11 cells of nickel iron/nickel cadmium) should clear within 6 to 7 seconds when the batteries are fully charged. A 38 foot gate arm installed on the basis of the 15 second curve of Figure 2-2 (8 cells lead storage or 11 cells nickel iron/nickel cadmium) should clear in approximately 8 seconds when the batteries are fully charged.

2.3 INSTALLATION PROCEDURE

The following procedure covers the installation of a grade crossing assembly which includes the Model 75 Gate Mechanism and gate arm. This procedure is divided into three phases. Paragraph 2.3.1 contains instructions for installing a signal mast and junction box base assembly along with flashing light units and signs. Paragraph 2.3.2 covers the installation of the gate mechanism, while paragraph 2.3.3 covers gate arm installation. If installing a gate mechanism on an existing mast, skip paragraph 2.3.1 and proceed directly to paragraph 2.3.2.

2.3.1 Mast, Junction Box Base, Lights and Sign Installation (See Figures A-6, A-7, A-8 and A-10 in Appendix A)

NOTE

Steps 'a' through 'e' should be completed with the mast lying flat on the ground.

a. Check the foundation and foundation bolts for proper alignment with the centerline of the road. Generally, the top of the foundation should be at least level with the crown of the road and no more than 4" above it.

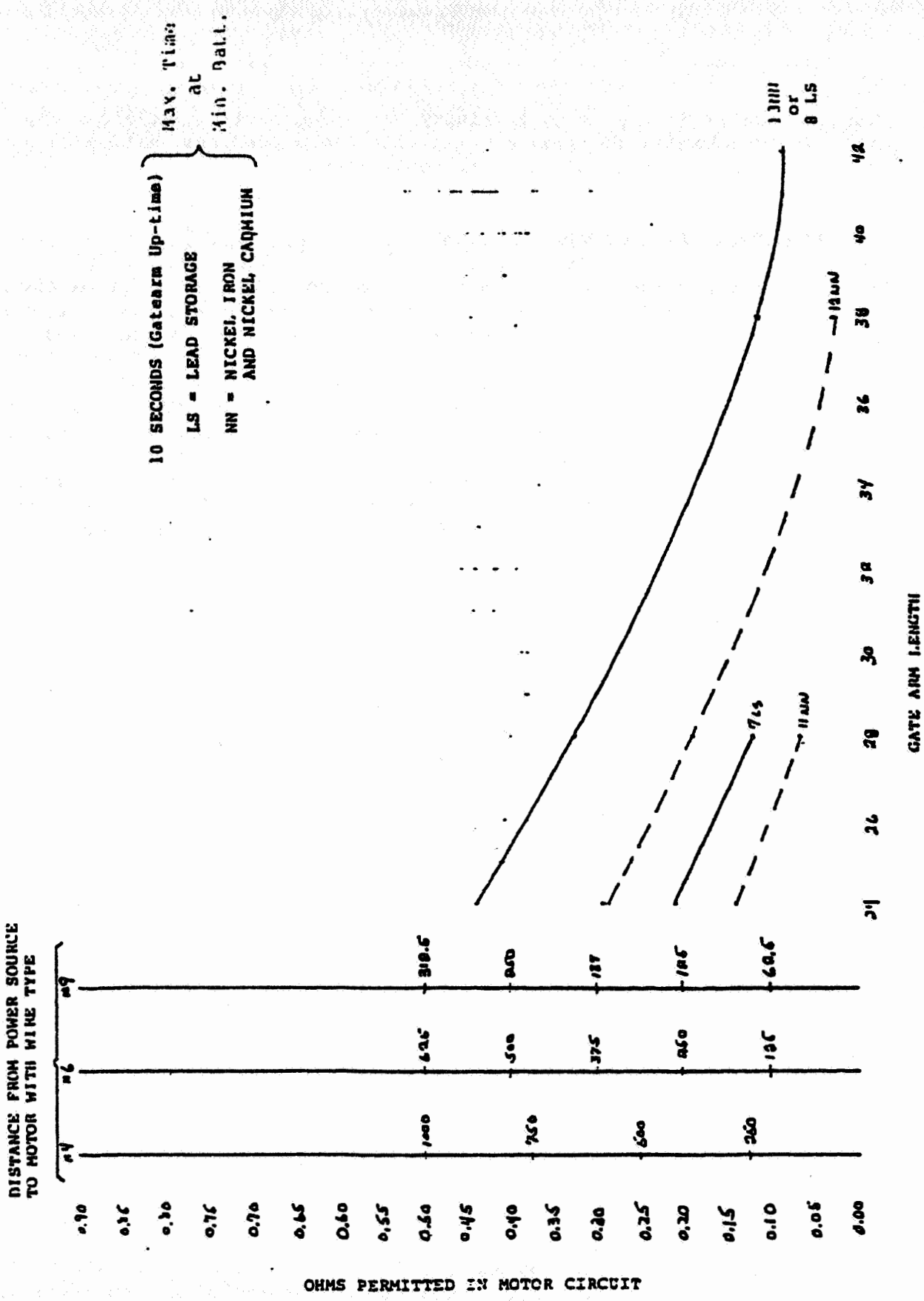

Figure 2-1. Ten Second Gate Arm Clearing Graph

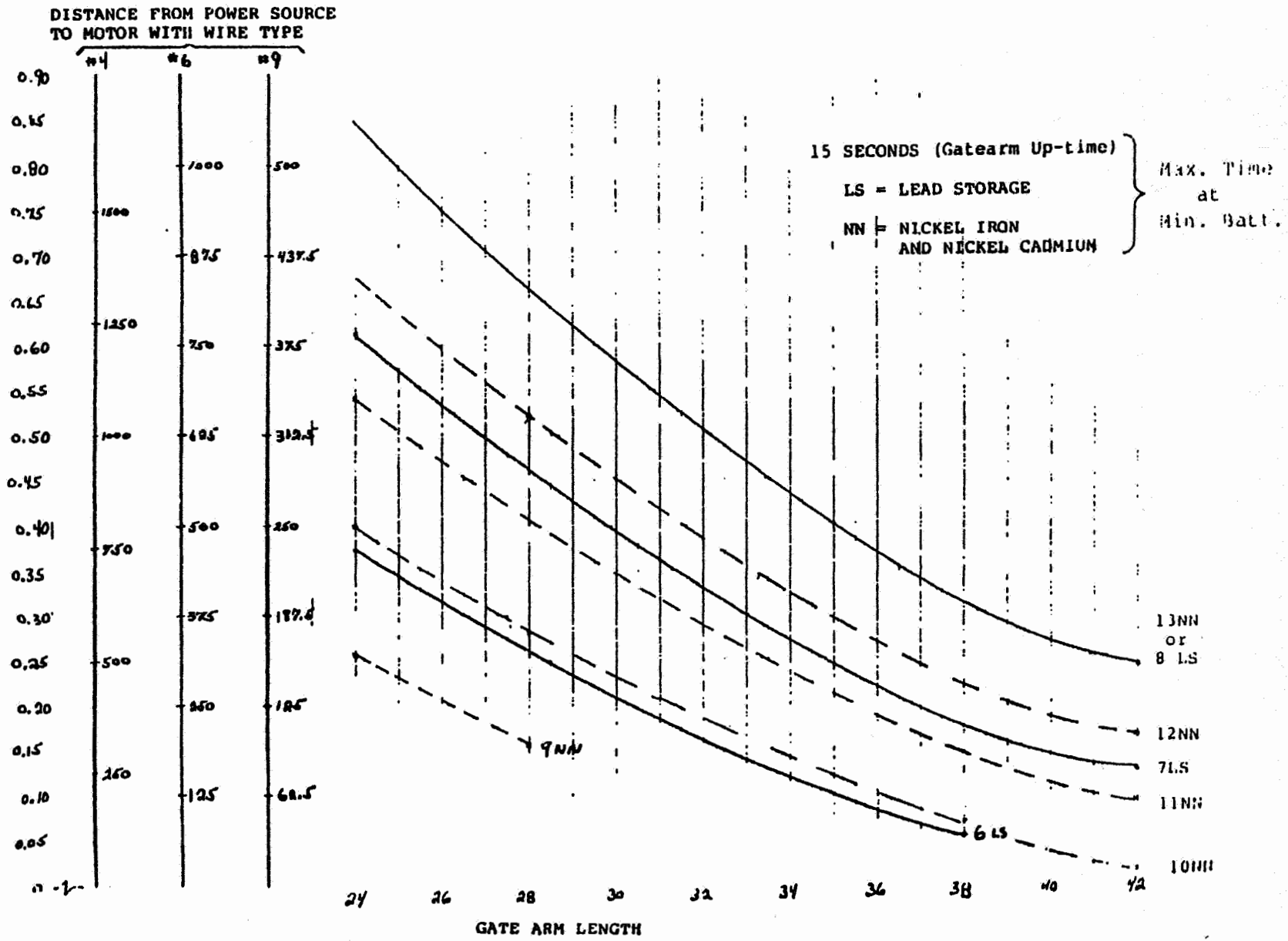

Figure 2-2. Fifteen Second Gate Arm Clearing Graph

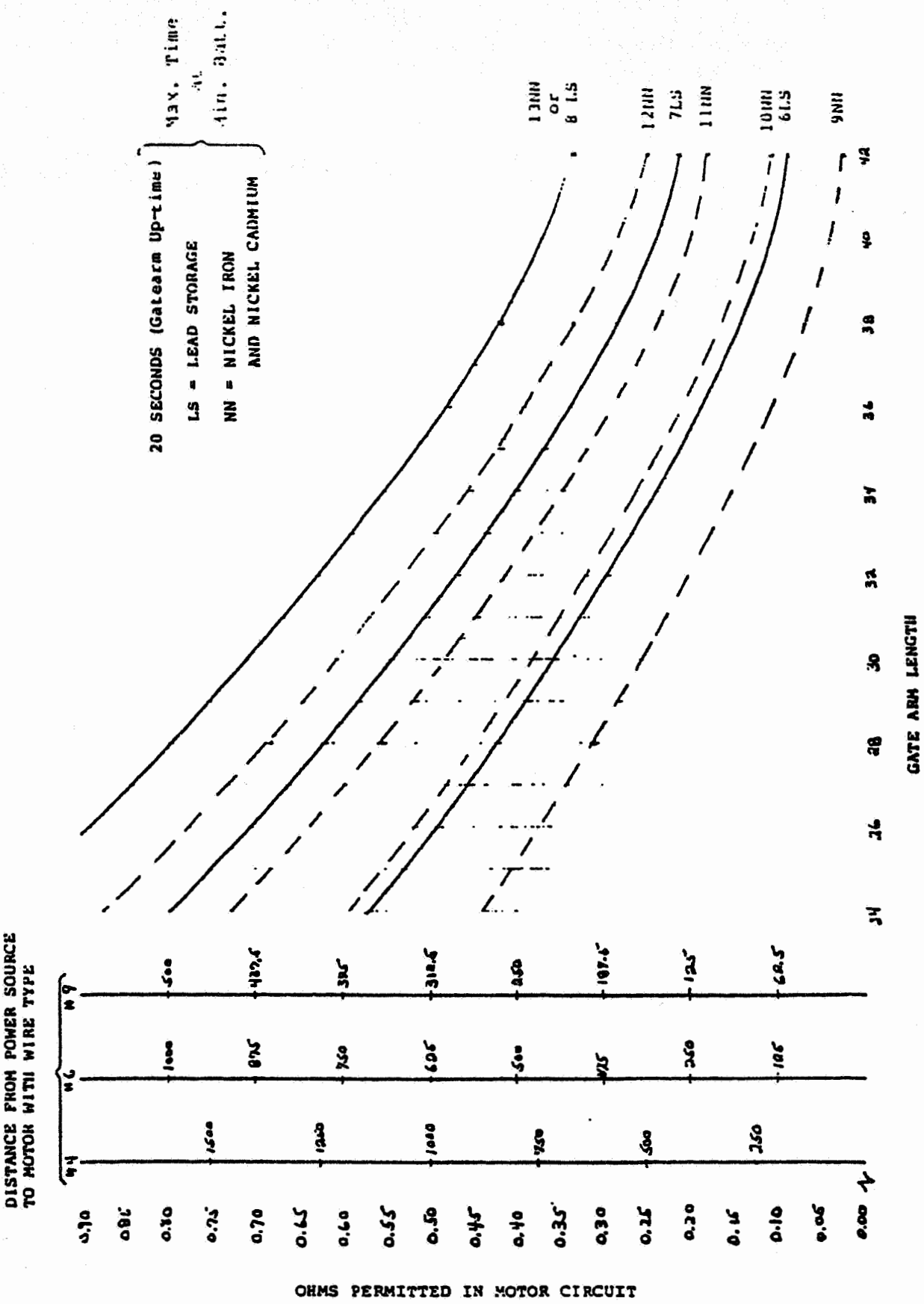

Figure 2-3. Twenty Second Gate Arm Clearing Graph

b. Assemble both halves of the junction box base and fasten it to the mast. Make sure that the rodent cover plate, if one is to be installed, is in place at the base of the mast.

NOTE

If a stub mast gate assembly is being installed, skip steps 'c', 'd', and 'e' and refer to stub mast gate assembly application drawing in Figure A-10.

c. Make the required number of wire runs (usually #14 flex wire) inside of the mast to the flashing lights and to the bell if one is used. Number each wire so that it can be identified.

d. Assemble light units (if used) according to instructions in service manual 6048 and mount them to the mast.

e. Assemble all signs and mount them at the correct height as shown in Figures A-6, A-7, A-8 and A-10.

f. Set the mast/junction box base assembly (with light units and signs) on the foundation and bolt it down. Verify that the mast is plumb.

g. Connect all field wiring to the junction box base while referring to the highway crossing system wiring diagram.

2.3.2 Model 75 Gate Mechanism

a. For an existing mast having a base with a solid top, drill and tap the top of the base to accept a conduit fitting having a 1-1/2" pipe thread as shown in Figure A-6. (The 1-1/2" flex conduit is supplied by US&S.) Junction box bases provided for new installations have already been drilled and tapped at the factory.

b. Attach the 2 pivot clamps (9, Figure A-6 or 4, Figure A-8, whichever is applicable) with hardware provided, to the mast. The top of the clamp should be approximately 45 inches above the foundation. These clamps permit the gate mechanism, when mounted, to be turned so that the gate arm installation can be performed off the roadway. The pivot clamps are optional items and are ordered separately from the gate mechanism.

c. Clamp the gate mechanism (without the gate arm support) to the mast on the side away from the roadway so that the center of the splined shaft is approximately 59-1/2 inches above the top of the foundation (see Figures A-6, A-7, A-8 or A-10).

NOTE

When the above dimensions are observed and the top of the foundation is 4" above the roadway the correct height of the gate arm above the roadway will be obtained (approximately 3'6").

d. Before mounting the flexible conduit to the gate mechanism and mast, determine the sizes and lengths of wires that are required for making connections between the gate mechanism and the junction box base. See Figures 3-1 and 3-2 and the pertinent highway crossing system circuits. Helpful data may also be obtained from Figures 2-1, 2-2 and 2-3.

   Using Figures A-6, A-8 or A-10 completely assemble the flexible conduit with the connector, elbow, and pipe clamp, and insert the wires in the conduit at the approximate position they will be in when the installation is completed.

   Mount the conduit so that the gate mechanism may be turned 90° from its normal position. This will permit the arm installation to be done parallel to the road.

e. Place the conduit nuts (60, Figure A-1) and box connector (94) together with a gasket (92) and washer (93) in the mechanism housing as shown. Insert the wires into the mechanism housing and connect the conduit to the housing.

f. Insert the wires into the junction box base and connect the conduit to the base.

g. Connect both ends of the wires in accordance with corresponding Figures 3-1 or 3-2 and the highway crossing system circuits.

h. Mount the vents (39, Figure A-1) on the housing with the opening facing down.

The half junction box bases (J705049-0602 for 4" masts and J705049-0801 for 5" masts) have 24 terminals mounted inside the junction box for wiring the control circuits, gate arm lights, and the signal flashing lights. However, when installing a gate mechanism on an existing signal mast, some of the jumper straps may have to be removed in order to provide sufficient terminal space.

2.3.3 Gate Arm Assembly and Installation (See Figures A-4, A-6, A-7, A-8, A-9 or A-10)

When installing telescoping aluminum or fiberglass combination gate arms, follow steps 'a' through 'l' and steps 'n' through 'p'. For wood gate arm installation, follow steps 'a' through 'g' and 'm' through 'p'.

Counterweight extension arms are specified only for wooden arm lengths greater than 30 feet. Gate arm length is considered to be the distance from the center line of the supporting mast to the tip of the gate arm. (Counterweight extension arms are not used with aluminum or fiberglass arms of any length).

Recommended torque values and counterweights for gate arms of various lengths are given in the tables of Figures A-6, A-7, A-8, A-9, or A-10 whichever is applicable.

NOTE

With the gate arm in the clear position, terminal 5A on the terminal board near the top of the gate mechanism, carries 12 Vdc @ 160 mA. While this may not be classified as a shock hazard, standard safety practices should be followed when Terminal 5A is used to cut power to the gate mechanism.

a. Loosen and back-off the brass colored nut on terminal 5A, located on the terminal board near the top of the gate mechanism (see Figure 1-2) to cut electrical power to the gate mechanism.

b. Turn the main shaft clockwise to the position it assumes when the gate arm is in the horizontal position. This condition exists when the segment gear (Figure 1-2) is in contact with the upper bumper stop bolt.

NOTE

To lock the mechanism in position temporarily insert a 3/8" bolt or tool through one of the 7/16-inch holes in the first gear (Figure 1-2). This will prevent the main shaft from turning during the remainder of the assembly.

c. Remove the nuts, washers, and spline protectors from the ends of the main shaft.

d. Apply a light coat of grease to the spline.

e. Mount the cast aluminum counterweight supports (1 and 2, Figure A-5) to the mechanism shaft while keeping the gate in the horizontal position. Replace the washers, lock washers, and nuts on the ends of the main shaft but do not tighten the nuts.

f. Mount the steel gate support (3, Figure A-5) to the counterweight supports using the nuts, bolts, and lock washers included with the gate support, then tighten securely. The telescoping gate arm support bracket and the wood gate arm support bracket are shown installed on the mechanism in Figures 2-4 and 2-5, respectively.

g. Tighten the nuts on the ends of the main shaft.

h. Determine the desired length of gate arm. Lay the aluminum or fiberglass gate arm sections on a flat surface and assemble per Figure A-4. Insert proper spacers, bolts, washers and lock washers, and nuts to connect the three sections and tighten securely, taking care not to damage the gate arm wires.

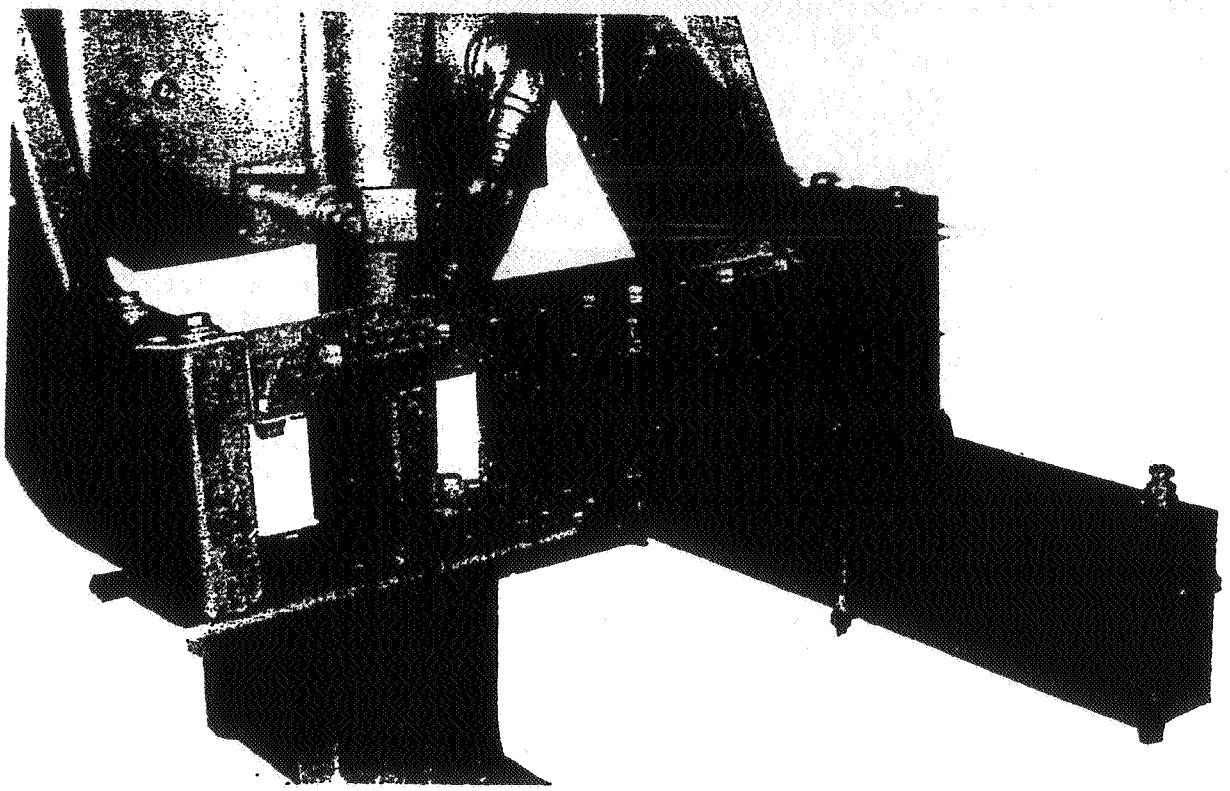

Figure 2-4. Telescoping Gate Arm Support

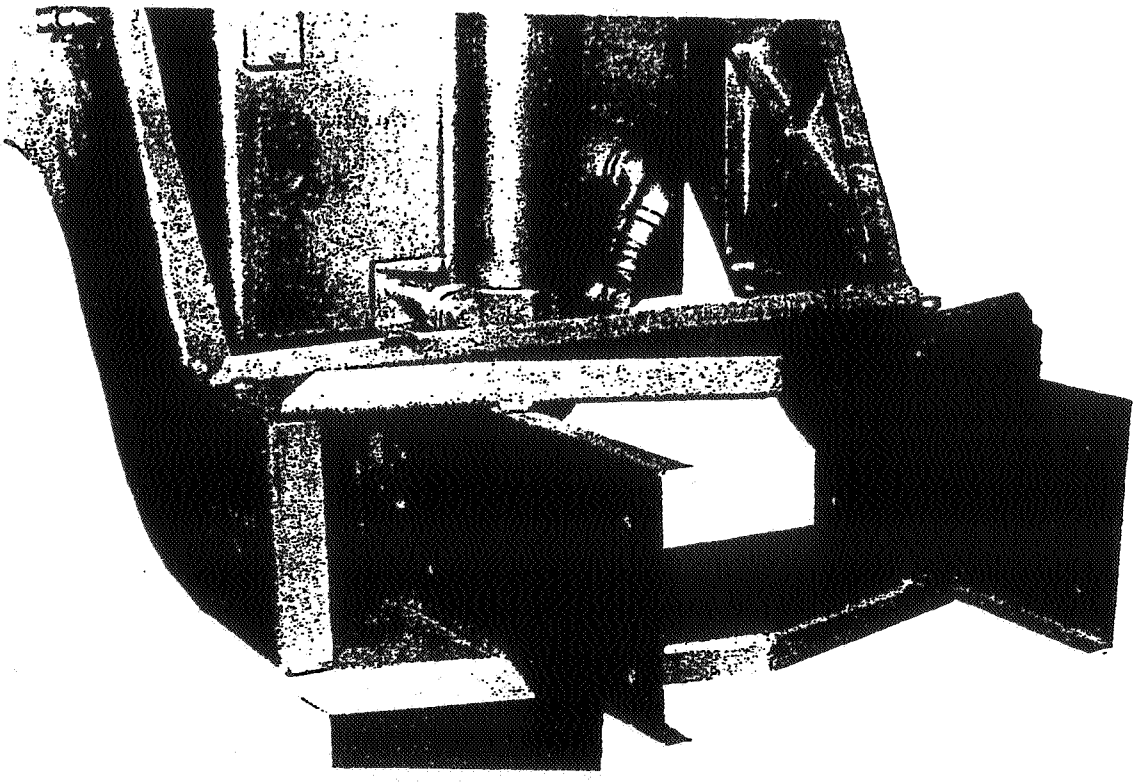

Figure 2-5. Wood Gate Arm Support

NOTE

Gate arms can be adjusted from 22' to 27', from 28' to 33', and from 34' to 40' by telescoping the second and third (tip) sections as shown in Figures A-6, A-7, and A-10. For gate arms shorter than 22', the inner portions of the second and third (tip) sections of the 17'-27' configuration must be cut (Figures A-6, A-7, and A-10).

i. Place the assembled arm in the channel section of the gate arm support. Secure the arm with the proper shear pin (see Figure 2-6). Use only the shear pins called for in the parts list. Use no substitutes.

CAUTION

TIGHTEN THE NUT ON THE SHEAR PIN BY HAND TO PREVENT ANY DAMAGE TO THE PIN AND INSERT THE COTTER KEY.

EXCESSIVE TIGHTENING OF THE CHANNEL BOLTS MAY DAMAGE OR DISTORT THE ARM SUPPORT AND CHANGE THE SHEARING CHARACTERISTICS.

j. Adjust the support plate (Figure 2-6) so that it bears against the end of the arm. Then tighten the support plate bolts. Adjust the two bolts on the side of the gate arm support channel (Figure A-5) by hand to take up any side play and align the arm properly in the support channel. Hand tighten the two bolts on the top of the gate arm support channel and the two bottom bolts on the gate arm support channel. The gate arm must fit snugly and not wobble in the support channel. Tighten the lock nuts of these four bolts and the lock nuts of the two bolts on the side of the support channel while holding the bolt heads with a wrench. This will prevent the bolts from turning when tightening the lock nuts.

NOTE

The lens for each gate arm light assembly must be removed to insert the bulbs that are packed separately.

k. Remove three screws from either side of the gate arm light assembly and remove the lens. Install the bulb in the socket and replace the lens.

l. Insert the plug on the end of the gate arm wiring harness into the receptacle attached to the support plate. Then loop the 3-conductor cable between the mast and gate mechanism box, through the cable grip, (61, Figure A-1) and into the gate mechanism box.

Connect the 3-conductor cable (wires 1A, 2A and 3A) to the terminal board inside the gate mechanism housing as shown in Figure 3-1 or 3-2 (Typical Wiring Diagram).

m. For the wood arm application refer to Figure A-8 and A-9. Install the arm as follows: Remove the bolts, nuts and washers from the mechanism end of the arm. Slide the gate arm into the channels of the arm supports (see Figure 2-5) and apply the washer plates on the inner

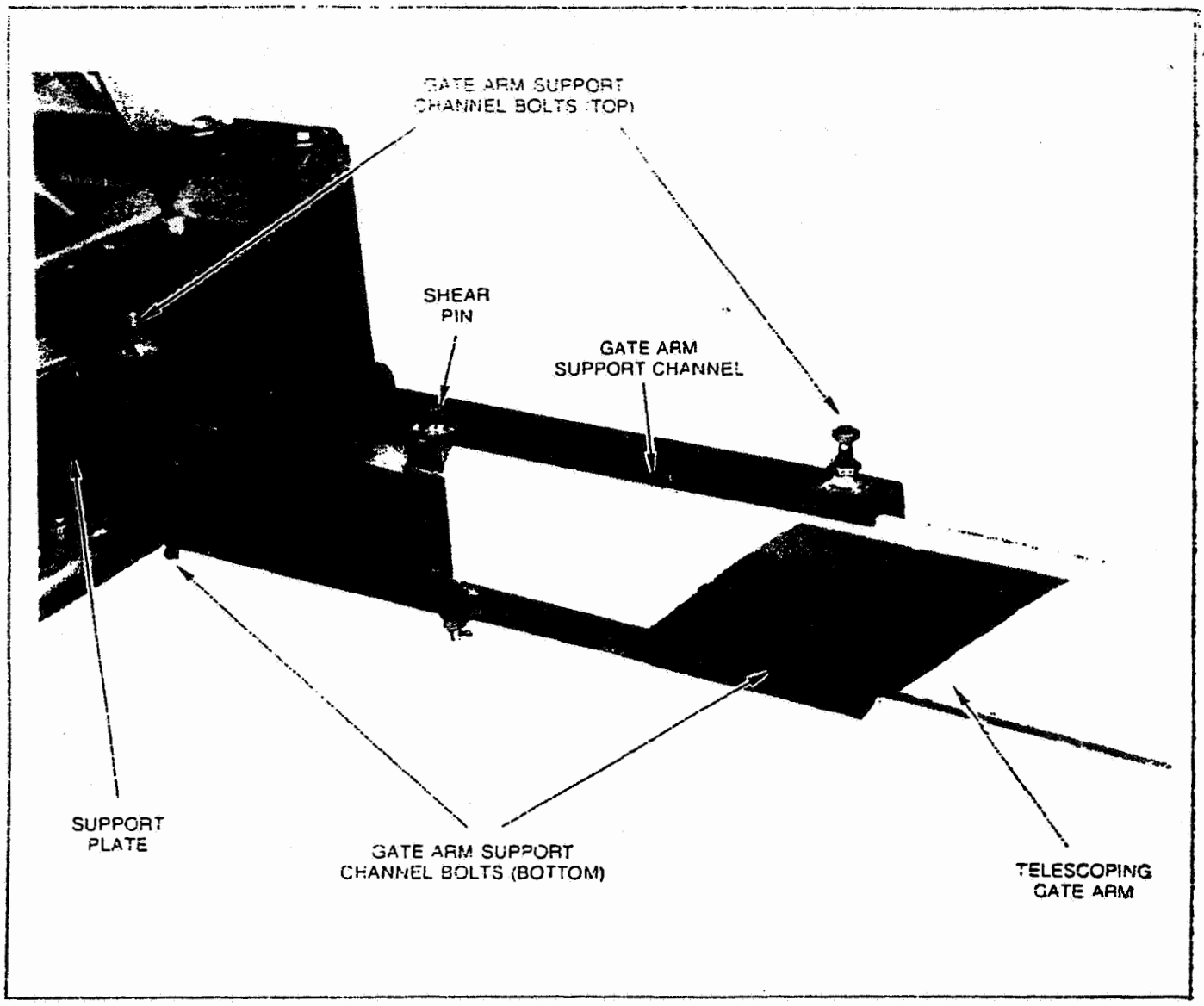

Figure 2-6. Telescoping Gate Arm Installed in Support Bracket

sides of the side boards. Install the lock washers and nuts and tighten securely. Install the gate arm terminal blocks and the gate arm lights per the manufacturers' recommendations.

n. Apply the proper counterweights according to the tables shown in Figures A-6, A-7, A-8 or A-10 for the arm length used.

o. Rotate the mechanism on the mast so the gate arm is properly positioned over the roadway before raising the arm.

p. Remove the temporary lock from the gear that was suggested in Step 1 to hold the gate arm in the horizontal position. Tighten the brass nut of terminal 5A on the terminal board near the top of the gate mechanism to resupply power to the mechanism.

2.4 ADJUSTMENTS

The adjustments listed and described in this paragraph are required to place the Model 75 Gate Mechanism and gate arms in service. The adjustments should be made in the order in which they are presented. All torque measurements and adjustments require a torque wrench with an adapter, an extension, and a socket as listed in paragraph 2.4.2.

2.4.1 Gate Arm-Lateral Adjustment

The lateral arm adjustment may be made only when using fiberglass or aluminum arms. The arm may be moved laterally to the left or to the right to avoid overhead obstacles such as traffic signal backgrounds.

a. To bring the arm to the horizontal position, remove power from the mechanism by loosening and backing off the nut of terminal 5A on the terminal board located near the top of the gate mechanism.

b. Before removing the arm, insert a 3/8-inch stop bolt or screwdriver in one of the 7/16-inch diameter holes in the first gear (Figure 1-2). This will prevent the gate shaft from turning when the arm is removed. For the succeding steps see Figures 2-5, 2-6, A-5, and A-7.

c. Remove the shear pin. Loosen the jam nuts and leveling screws and remove the arm.

NOTE

It may be necessary to relocate any or all of the bracing spacers (Figures 2-5 and A-5) when locating the gate arm support channel assembly. Distribute the spacers for best bracing by placing 2 of the braces parallel to the gate shaft and 1 brace perpendicular to the gate shaft.

d. Remove the arm holder by removing the hardware at 8 locations.

e. Move the gate arm support channel assembly to the desired position and resecure it with hardware. (The arm holder may be moved 6 inches from center to either side in increments of 1 inch.)

f. Reinstall the arm and remove the stop bolt from the first gear (Figure 1-2). Check for final clearance.

2.4.2 Torque Adjustment - Horizontal and Clear Positions

A torque wrench is used for measuring horizontal and clear position gate arm torque. Torque measurements may be taken at either end of the drive motor shaft.

WARNING

BE SURE TO SUPPORT COUNTERWEIGHT WHEN LOOSENING NUTS (9,Figure A-5) TO ADJUST TORQUE. WEIGHTS MAY DROP, CAUSING PERSONAL INJURY OR EQUIPMENT DAMAGE.

The following tools are recommended for torque [illegible] measurement. (See Tool List in Section IV for commercial tool references.)

Torque Wrench:	0-75 inch pounds
Adapter:	1/4" Female to 3/8" Male
Extension:	3/8" - 1-1/2 Long
Socket:	1/2" 8 pt. - 3/8" Drive

Assemble the tools in the above order.

2.4.2.1 Horizontal Position Torque Measurement

Raise the gate arm off the bumper stop. (Approximately 5° above the horizontal position.) Apply the torque wrench, with socket, to the motor shaft as shown in Figure 2-7. With the wrench held vertically the torque reading should be 6 to 8 inch pounds (between 55 to 75 foot pounds at the gate arm).

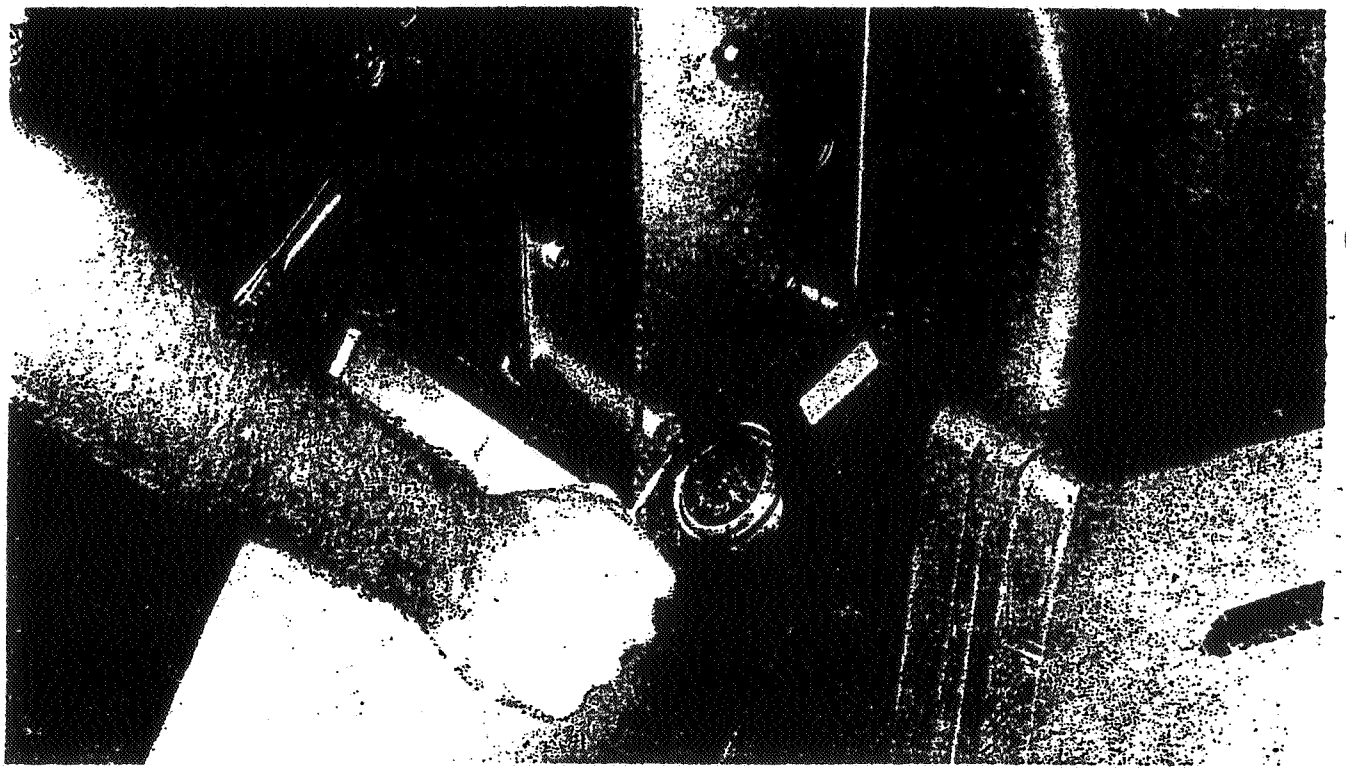

Figure 2-7. Gate Arm Torque Measurement

2.4.2.2 Horizontal Position Torque Adjustment

To adjust the horizontal position torque value loosen nuts (9, Figure A-5) which are on the serrated side of the arm supports sufficiently to slide counterweights (5 and 6, Figure A-5) along the serrated slot on the counterweight arm. (Moving the weights forward increases the torque while moving the weights

rearward decreases it). Check the torque again at the new counterweight position. Repeat the operation until the torque reading is 6 to 8 inch pounds and then tighten the nuts.

2.4.2.3 Clear (Vertical Position) Torque Measurement

Raise the gate arm to the vertical position. Apply the torque wrench, with socket, to the motor shaft (Figure 2-7). While holding the wrench securely cut electrical power to the mechanism by loosening and backing off the brass colored nut on terminal No. 5A.

Note the torque on the torque wrench in IN-LBS. (Refer to the table in Figure A-6, A-7, A-8 or A-10 for the appropriate clear position torque for the length and type of arm being used.)

2.4.2.4 Clear Position Torque Adjustment

To adjust the clear position torque value loosen the outside nuts (9, Figure A-5) sufficiently to slide the counterweights along their slot and then retighten (moving the weights rearward decreases the torque). Measure the torque again as previously explained at the new counterweight position. Repeat the operation until a desirable clear position torque is obtained.

2.4.3 Horizontal Arm Adjustment

Adjust the horizontal arm position by the following procedure (see Figure A-5).

a. Loosen the locknut and turn the slotted screw on the bumper stop assembly (50, Figure A-1). A screwdriver can be used to make this adjustment.

b. After the arm is in the desired position, tighten the locknut firmly.

The stop bolt (62, Figure A-1) on the lower bumper stop is factory adjusted to clear the segment gear with the arm in the clear position.

2.4.4 Cam Adjustment

The adjustable cam (Cam #1, Contacts 1B, 1C) is set at the factory to release the motor up circuit when the gate arm is in the vertical position (90°).

If it is desired to stop the gate arm between 70° to 93°, perform the following adjustment. (See adjustable cam assembly illustrated in Figures A-1 and A-2.)

a. Move the gate arm to the horizontal position.

b. Loosen the two 1/4-20 socket head screws that hold the adjustable portion of the cam (24, A-1) to the fixed cam.

c. Rotate the adjustable cam down to the desired position and tighten the socket head.

With the adjustable cam rotated to the maximum down position, the motor up circuit will release when the gate arm is at a 70° angle.

2.4.5 Adjustment of Descending and Clearing Time

Check the descending and clearing time of the arm with a stop watch. The normal descending time should be between 8 and 15 seconds. This time can be varied by adjusting the snubbing resistor (Figure 1-2). Moving the SLIDE CONTACT upward will increase the down time.

A 27 foot gate arm in the horizontal position should clear within 7 to 9 seconds. Motor current should read approximately 9 amperes at the end of the stroke with a nominal 12 volt power supply. A 32 foot gate arm in the horizontal position should clear in approximately 10 seconds. Motor current should read approximately 12 amperes with a nominal 12 volt power supply. Higher input voltages will decrease the time it takes for the gate to clear.

IMPORTANT

To provide a good electrical connection for the snub circuit, care should be taken to see that the slide contact on the snubbing resistor is bearing on the winding with firm pressure and that the lockscrew is tightened to hold the slide securely in place. Also check other termination points in the circuit.

2.4.6 Hold Clear (Electric Brake) Air Gap Adjustment

The hold clear armature air gap is factory-set to be no less than 0.015" and no more than 0.025". The hold clear unit must engage and hold the gate arm in the clear position without slipping with at least 10 Vdc applied to it. The hold clear armature air gap should be measured and adjusted, if necessary (see troubleshooting chart in Section III), according to the following procedure.

a. Lock the mechanism in the clear position by temporarily inserting a 3/8" diameter bolt or a screwdriver through one of the 7/16" diameter holes in the first gear (Figures 1-2 and 2-8).

b. With power applied to the gate mechanism and the hold clear unit energized, insert a 0.020" thick gauge between the coil and the armature (see Figure 2-8).

c. The armature must be in full contact with the gauge. If the gauge is loose or if it cannot be inserted, the air gap must be adjusted - proceed to step 'd'. If the gauge can be inserted and if it is in full contact with the armature, the gap is adjusted correctly.

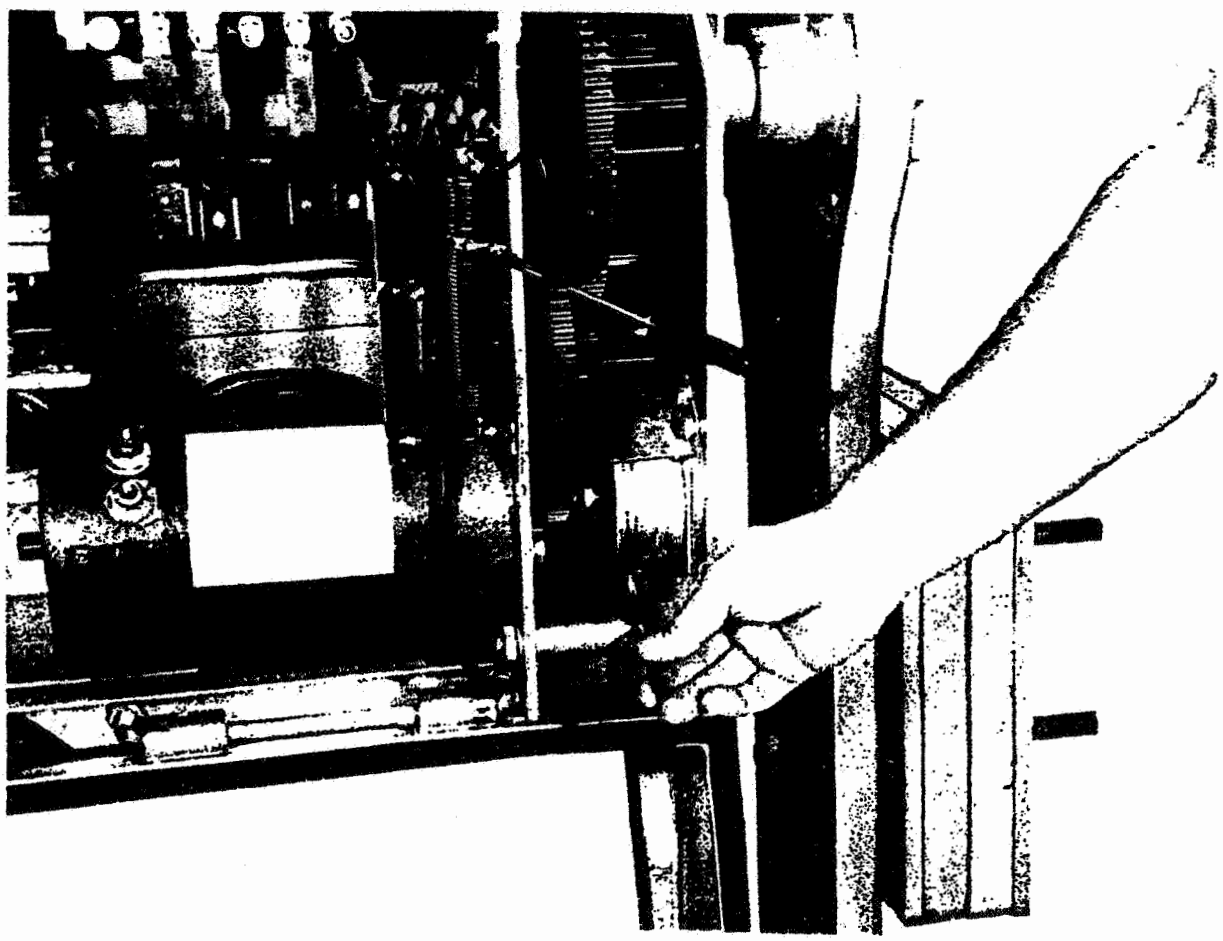

d. De-energize the hold clear unit by removing power from the gate mechanism. (Loosen the brass nut of terminal 5A on the terminal board near the top of the gate mechanism.)

e. Loosen the armature allen head set screws.

f. Reinstate power to the gate mechanism and energize the hold clear unit. (Tighten the brass nut on terminal 5A.)

g. Insert the 0.020" gauge between the coil and the armature. Position the armature so that it is in full contact with the gauge. The gauge must not fit loosely between the armature and the coil.

h. Carefully tighten the armature allen set screws.

i. Deenergize the hold clear unit by removing power from the gate mechanism. (Loosen the brass nut on terminal 5A.) Remove the 0.020" gauge.

j. Reinstate power to the gate mechanism to energize the hold clear unit. (Tighten the brass nut on terminal 5A.)

k. Remove the 3/8" diameter bolt or screwdriver, inserted in step 'a', from the first gear (Figures 1-2 and 2-8).

2.4.7 Operation of Gate Arm Lights

When the gate mechanism is in operation, verify that the gate arm tip light is steadily illuminated and that the 2 inner lights are flashing alternately. If any of the gate arm lights are not functioning, check the plug connector located inside the gate arm by removing the access plate below the light, or refer to Troubleshooting Chart, Table 3-1.

2.5 GATE ARM REPLACEMENT

As described earlier, the telescoping gate arm shear pin arrangement allows the gate arm to break free of the gate mechanism if the arm is struck by a vehicle. Since the counterweights will cause the gate arm support to rise to the vertical position after the gate arm has been detached from the support bracket, the gate arm support/counterweight assembly must be brought to the horizontal position for the gate arm to be replaced. This is easily done by manually cranking the gate mechamism with ratchet wrenches as described below.

2.5.1 Gate Arm Cranking Procedure

To crank the mechanism use 2 ratchet wrenches and the two square tubing sockets which comprise US&S socket kit N451151-1203. Insert the one ratchet wrench with the longer socket on the gear end of the motor shaft through the access hole in the frame as shown in Figure 2-9.

Insert the other ratchet wrench with the shorter socket on the other end of the motor shaft. Arrange the ratcheting on the wrenches so that one of the wrenches cranks while the other ratchet holds the shaft from rotating backward. This is accomplished by the ratchet selector lever on the wrench. To reverse the action move the selector lever on both wrenches to the opposite position.

If desired, 8 point or 12 point commercial sockets suitable for insertion over a 1/2" square shaft may be used. In addition, a 2" long drive extension is required at the brake end of the motor.

To hold the mechanism in any cranked position insert a 3/8 inch stop bolt or screwdriver in one of the 7/16 inch diameter holes provided in the first gear (Figure 1-2).

After cranking the gate mechanism to the horizontal position, install the telescoping gate arm according to the procedure in paragraph 2.3.2.

If desired, the mechanism can also be [illegible] the gate arm to the vertical clear position. The procedure is the same, but the direction of ratchet rotation is opposite to that necessary for cranking down.

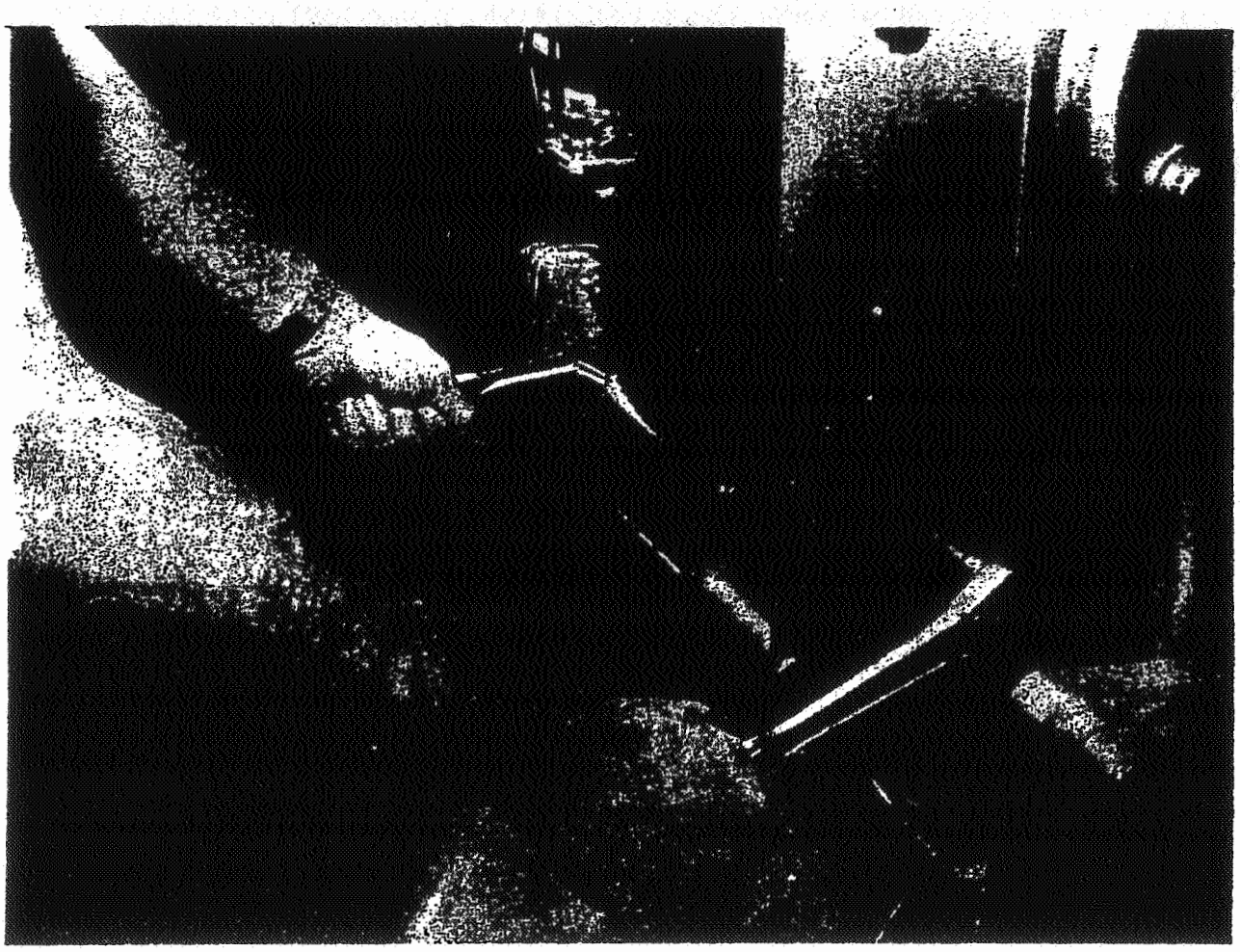

Figure 2-9. Gate Arm Cranking

2.6 MOTOR THERMAL PROTECTION WIRING

Gate mechanisms N451483-0107 and N451483-2103 are factory wired to include the thermal protection in the motor control circuit.

When it is desired to apply the motor thermal protection into the motor control circuit, proceed as follows:

a. Remove the lead that connects the (+) terminal of the Motor Control Relay coil to the (1C) terminal post on the main terminal board (see Figures 3-1 and 3-2).

b. Attach the two leads, N438713-009 and N438713-010 (included in thermal kit, N451484-8001, furnished with each mechanism) onto the 1/4"-20 terminal posts on the motor.

c. Route the shorter lead to the (+) terminal on the Motor Control Relay coil.

d. Route the longer lead to the (1C) terminal post on the main terminal board.

SECTION III
OPERATIONAL DESCRIPTION AND TROUBLESHOOTING

3.1 INTRODUCTION

This section includes an operational description of the Model 75 Gate Mechanism and a troubleshooting chart. The operational description can be used as an aid in determining operating problems.

3.2 OPERATIONAL DESCRIPTION

The following steps outline the operation of the gate mechanism. See typical wiring diagrams in Figures 3-1 and 3-2.

a. The gate arm is normally held in the clear (vertical) position by the hold clear unit (electric brake). The 1B-1C and 3B-3C contacts of the gate mechanism circuit controller are open and the 2B-2C, 4B-4C, and 5B-5C contacts are closed.

b. When a train approaches a crossing, power is removed from the hold clear unit by the crossing control circuits.

c. The motor down circuit is energized by the highway crossing system control circuits (through the contacts of the integral GCR on mechanisms so equipped) and the motor begins driving the gate arm down. At this time 1B-1C contacts close and the 2B-2C contacts open. (Note that although 1B-1C contacts are closed, the motor control relay contacts will remain open until power is delivered to the motor-up circuit by external crossing control circuits.)

d. The gate arm is driven down by the motor 46° away from the vertical position. At this time, contacts 5B-5C open and remove power from the motor. Gravity causes the gate to continue its downward movement to the horizontal position. During gravitational descent, the motor acts as a generator and discharges its current through the 2-ohm snubbing resistor. As the gate arm attains its horizontal position, contacts 4B-4C open the warning bell circuit, and the bell stops ringing (if the crossing system is equipped with a bell). Contacts 3B-3C close at 10° above the 0° horizontal gate arm position.

e. With the gate arm in the down position, the 1B-1C and the 3B-3C contacts are closed, and the 2B-2C, the 4B-4C, and the 5B-5C contacts are open.

f. After the train passes the crossing, the motor up circuit is energized (through the contacts of the integral GCR on gate mechanism so equipped) by external crossing control circuits. This energizes the coil of the motor control relay, closes its front contacts and applies power to the motor which begins to rotate the gate arm upward. At this time contacts 4B-4C close. (The bell, however, will remain silent in most applications since the XR relay in the highway crossing control circuits has already become energized). Contacts 3B-3C also close.

g. As the gate continues its upward movement, the 5B-5C contacts close approximately 46o away from the vertical clear position so that they can be reset for the next descent cycle.

h. Just as the gate arm reaches the clear position of 90°, 2B-2C controls close and the 1B-1C contacts open. The opening of the 1B-1C contacts deenergizes the motor control relay and removes power from the motor since the back contacts of the motor control relay open and the front contacts close. The hold clear unit is energized through the 2H-2B contact of the motor control relay.

i. If the gate mechanism should become jammed, causing the motor to stall, the thermal switch sensing the temperature of the motor brush holder, and reaching a pre-determined level, will cause the thermal switch contacts to open. At "locked rotor" currents of 40 to 50 Amps., the switch opens after approximately 6 minutes. The switch will remain open for approximately 20 minutes while allowing the motor to cool. With this protection, the motor can be stalled for periods exceeding 8 hours without harming the motor.

3.3 TROUBLESHOOING

Possible problems with the Model 75 Gate Mechanism are listed in the left column of the following troubleshooting chart. The causes of the problems and their remedies are listed in the adjacent columns.

TABLE 3-1. TROUBLESHOOTING CHART

TROUBLE	CAUSE	REMEDY
1. Motor does not drive gate arm through power-down portion of descent cycle.	a. Open motor-down circuit.	a. Trace motor down circuit in gate mechanism and find open point. Check all wiring connec- tions (see Figures 3-1 and 3-2).
2. Slow gate arm descent from clear position.	a. Excess resistance in motor down limiting circuit.	a. Decrease resistance by adjusting limiting resistor.
3. Rapid gate arm descent during gravitational portion of descent cycle (46° to 0°).	a. Open snubbing circuit.	a. Trace snubbing resistor circuit and find open point. Check all wiring connections (see Figures 3-1 and 3-2).
	b. Improper hori- zontal position torque adjustment.	b. Check horizontal position torque as explained in paragraph 2.4.2.1. If necessary, adjust torque as des-cribed in paragraph 2.4.2.2.
4. Slow gate arm descent during gravit- ational position of descent cycle (46° to 0°).	a. Lack of resistance in snubbing circuit.	a. Adjust snubbing resistor to increase resistance
	b. Improper horizontal position torque adjustment.	b. Check horizontal position gate arm torque explained torque explained in para-

TABLE 3-1. TROUBLESHOOTING CHART Cont'd.

TROUBLE	CAUSE	REMEDY
		graph 2.4.2.1. If necessary, adjust torque as described in paragraph 2.4.2.2.
5. Gate arm drops below horizontal position.	a. Improper bumper stop adjustment.	a. Adjust horizontal bumper stop as explained in paragraph 2.4.3.
6. Gate arm remains in horizontal position when track is unoccupied.	a. Open motor-up circuit.	a. Trace motor-up circuit and find open point. Check all wiring connections (see Figures 3-1 and 3-2). b. Thermal protection switch in motor may be open due to motor heat.
7. Gate arm does not stop at 90° (or at desired point) in clear position.	a. Improper adjustment of Cam #1.	a. Adjust Cam #1 as explained in paragraph 2.4.4 (see Figure A-2).
8. Gate arm pulsates in clear position.	a. Improper adjustment of hold clear armature air gap.	a. Adjust armature air gap as explained in paragraph 2.4.6.
9. Gate arm does not rotate smoothly during initial operation cycles.	a. High spots on clutch in hold clear unit.	a. Operate the gate mechanism through 10-20 cycles. This will "break-in" the clutch and enable the gate mechanism to operate smoothly.
10. Gate arm lights do not illuminate.	a. Improper or poor wiring harness connection. b. Improper wiring connections in junction box base.	a. Check wiring harness connections and trace for open circuit. b. Check wiring from gate mechanism to junction box base.

If these gate mechanism malfunctions are not corrected by the remedies listed in the table, the probable causes originate in the highway crossing control system circuits. Refer to the circuit diagrams for the particular system involved.

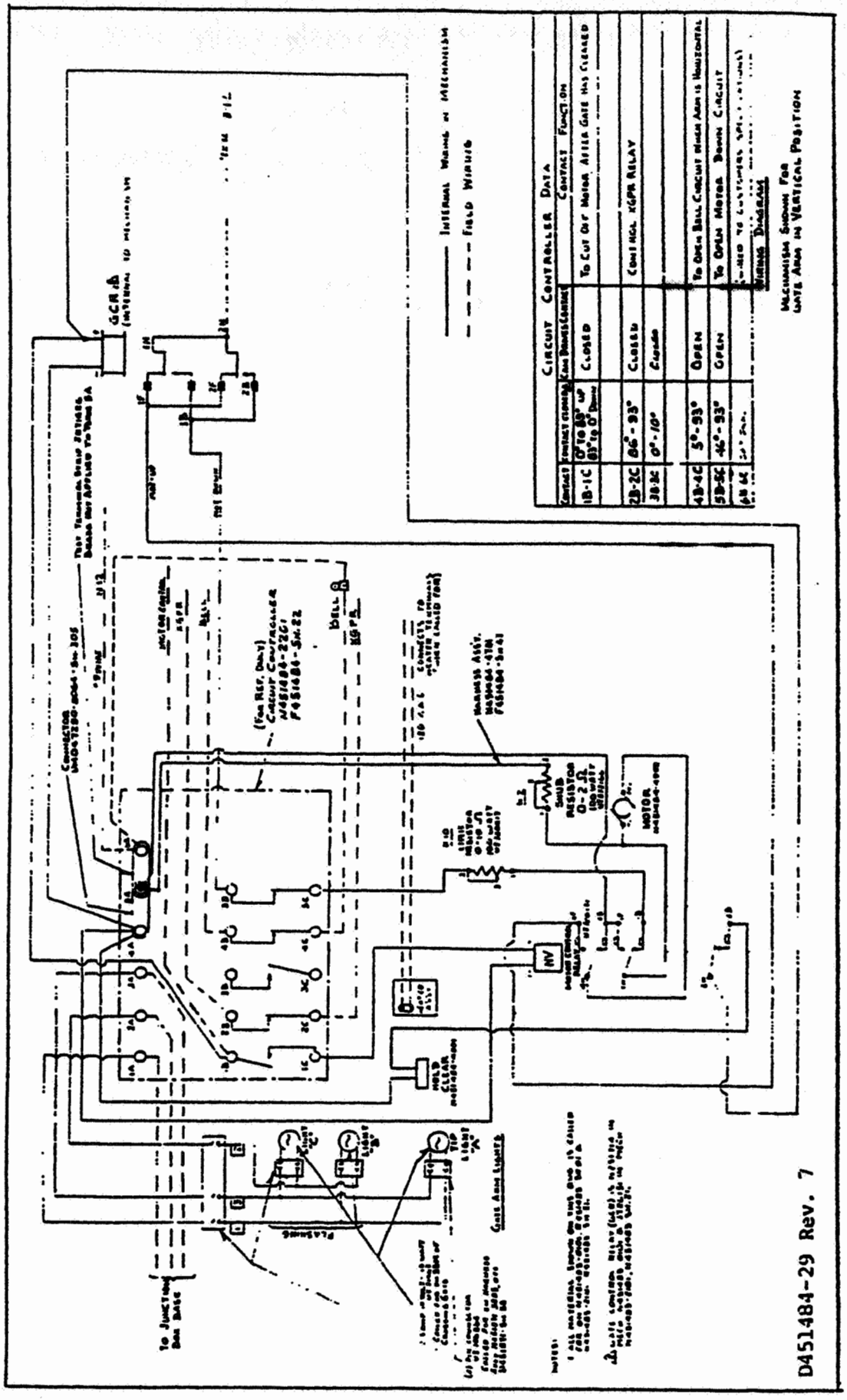

Figure 3-1. Wiring Diagram of Model 75 Gate Mechanism with Integral Gate Control Relay (GCR)

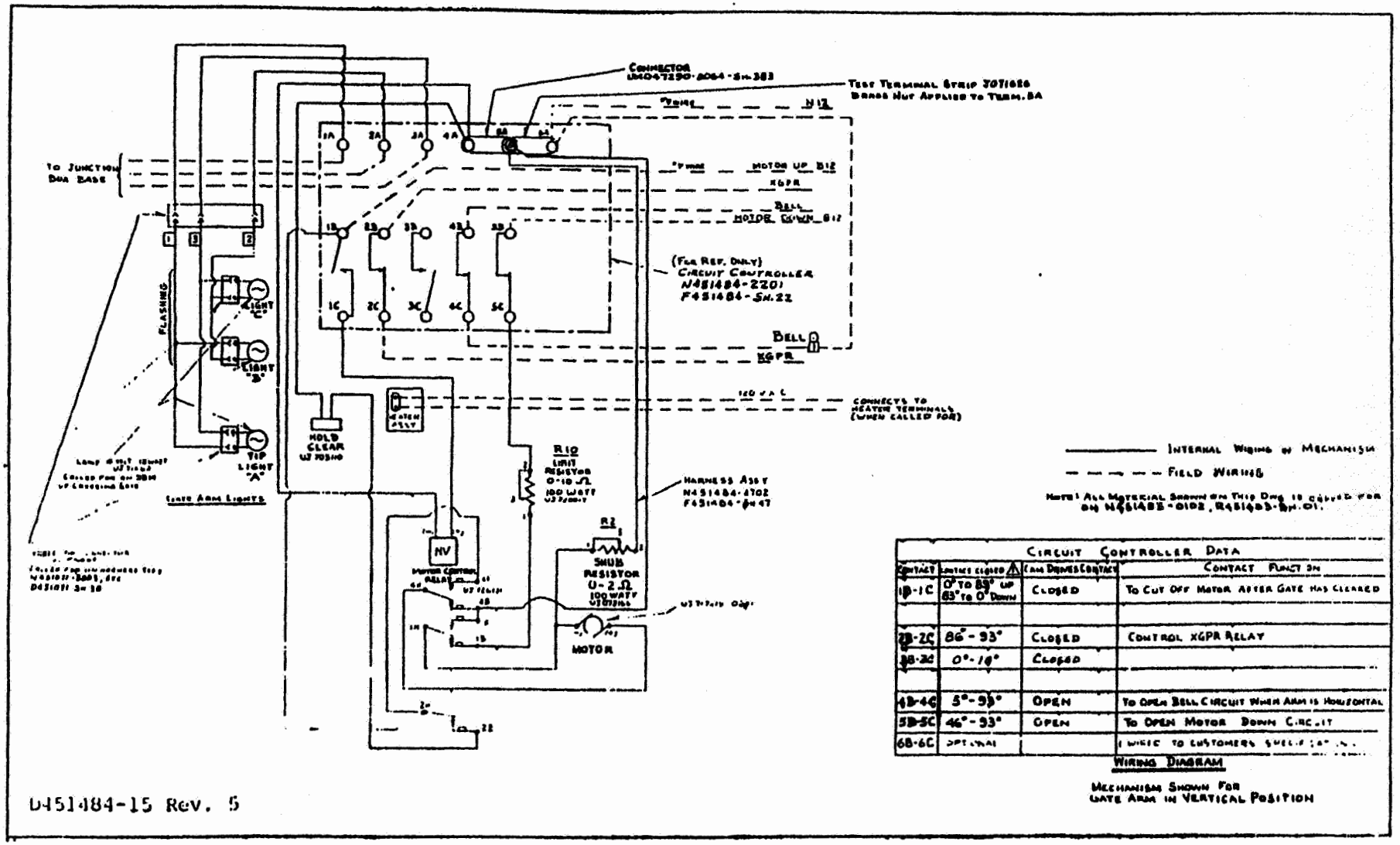

Figure 3-2. Wiring Diagram of Model 75 Gate Mechanism without Integral Gate Control Relay (GCR)

SECTION IV
MAINTENANCE

4.1 INTRODUCTION

This section includes preventive maintenance procedures, part replacement and repair, and tools that are required for maintenance and adjustments.

4.2 PREVENTIVE MAINTENANCE

To insure trouble-free gate mechanism operation, the preventive maintenance procedures described in this paragraph should be followed at least every six months. In areas where the gate mechanism is subjected to a large number of service cycles, the interval between maintenance periods will have to be adjusted accordingly.

4.2.1 Inspection and Cleaning

Verify that all wiring connections are tight and that the wiring is not nicked, cut, or frayed.

The circuit controller contacts, motor control relay contacts, and the hold clear armature should be wiped clean of any oil, grease, and dirt that may have accumulated during operational service.

4.2.2 Lubrication

The mechanism gear shaft and main shaft bearings are pre-lubricated and double sealed at the factory and require no lubrication in the field.

The gear teeth and circuit controller cam surface are to be given a light brush coat of lubricant. Texaco Regal AFB2 (MIL-G-3278) grease is recommended for all-weather gear lubrication. The time interval for lubricating the gears depends on usage and should be determined by the customer but should not exceed six months.

4.2.3 Circuit Controller and Contact Adjustment

See Figure A-2 while following this procedure.

Circuit controller contacts should be checked at regular intervals for proper opening. All contact openings are factory adjusted to have a 3 to 3-1/2 pound force between the nylon cam follower and cam and to have a 1-1/2 to 1-3/4 pound closed contact pressure. This adjustment will provide a minimum contact opening of 1/16 inch and a maximum wipe of 1/64 inch when the gate arm is in the clear position. With the gate arm in the clear position, the force to move the nylon cam follower away from the cam rocker arm should be approximately 1/4 pound. This force should be measured by pulling the spring adjacent to the top of the cam follower with a spring scale. If contact spring adjustment is necessary, the spring should be bent slightly more than is required and then bent back to the desired pressure so that creepage is minimized.

4.2.4 Snubbing and Limiting Resistor Contact Check

Verify that the slide contacts on these resistors are clean and are bearing on the resistor windings with firm pressure. The lockscrew which holds the slide contact in place should be tight. Refer to Section 2.4.5 for adjusting procedure.

4.3 PARTS REPLACEMENT/REPAIR

Life testing and field experience has shown all parts of this mechanism to be long lived; therefore, detailed repair/replacement instructions are not included in this manual. Should replacement of any part(s) become necessary, reliance on good mechanical repair practice and safety consideration should be followed with reference to this service manual for final adjustment.

4.4 TOOL LIST

The following list includes tools that are required for the adjustments described in Section II and III. While Snap-on and J. C. Williams tools have been specified for references, equivalent tools of other manufacturers are satisfactory.

4.4.1 Torque Measurement Tools

a. Wrench, torque, 1/4" square drive, 75-0-75 in-lb, Snap-On #TE-6A.

b. Adapter, 1/4" Female to 3/8" Male square drive, Snap-On #TA-3.

c. Extension, 1-1/2" long, 3/8" square drive, Snap-On #FX-1.

d. Socket, double square, 1/2" wrench size, 3/8" square drive, Snap-On #F-316.

4.4.2 Gate Mechanism Cranking Tools

a. Wrench, ratchet, 3/8" square drive, Snap-On #F-710D. Chrome finish, or Snap-On #GF705 Black Finish (2 required).

b. Socket, double square, 1/2" wrench size, 3/8" square drive, Snap-On #F-316..

c. Extention (Item C, 4.41), and Socket (Item D, 4.41).

4.4.3 Bumper Stop Adjustment Tools

a. Wrench, check nut (thin), 1-1/16" size, J. C. Williams & Co. #607.

b. Wrench, check nut (thin), 1-1/4" size, J. C. Williams & Co. #608.

4.4.4 Cam Adjustment Tool

Wrench, Hex Head (Allen Head), 3/16" size, Snap-On #AWL-6.

4.4.5 Hold Clear Armature Adjusting Tool

Wrench, Hex Head (Allen Head), 1/8" size, Snap-On #AW-4.

SERVICE MANUAL 6043
Appendix A

Parts Lists/Diagrams

for

MODEL 75 Gate Mechanism

N451483-0101
N451483-0102
N451483-0103
N451483-0104
N451483-0105
N451483-0106
N451483-0107
N451483-2101
N451483-2102
N451483-2103

UNION SWITCH
& SIGNAL INC.
A member of the ANSALDO Group

5800 CORPORATE DRIVE
PITTSBURGH, PA 15237

June, 1984 (Rev. 3/87)
ID0070D/DN0016D
C-9/89-75-2048-7

COPYRIGHT 1989, UNION SWITCH & SIGNAL INC.
PRINTED IN USA

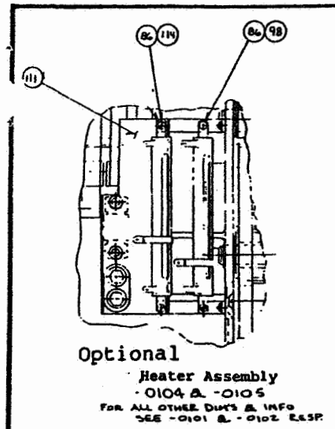

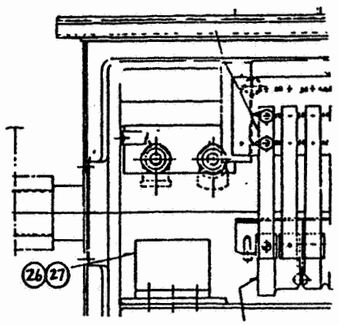

GATE MECHANISM WITH NON-VITAL RELAY

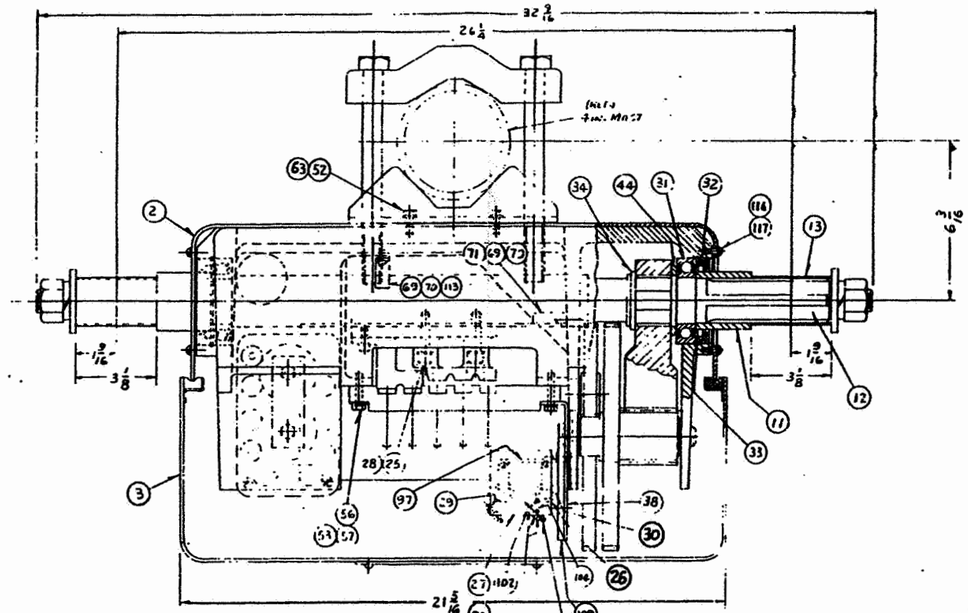

MODEL 75 GATE MECHANISM N451483-XXXX

SUFFIX	GATE CONTROL RELAY (GCR)	HARNESS ASSEMBLY	HEATER ASSEMBLY	CONTROLLER CIRCUIT
-0101	with *	N451484-4701	--	N451484-2201
-0102	--	N451484-4702	--	N451484-2201
-0103	--	N451484-4703	--	N451484-2202
-0104	with *	N451484-4701	N451484-6902	N451484-2201
-0105	--	N451484-4702	N451484-6902	N451484-2201
-0106	with *	N451484-4701	--	N451484-2202
-0107	with *	N451484-4704	--	N451484-2201
-2101	with **	N451484-4701	--	N451484-2201
-2102	with **	N451484-4701	N451484-6902	N451484-2201
-2103	with **	N451484-4701	--	N451484-2201

* With vital DH-22A GCR (Item 100)
** With non-vital GCR (Item 26 & 27)

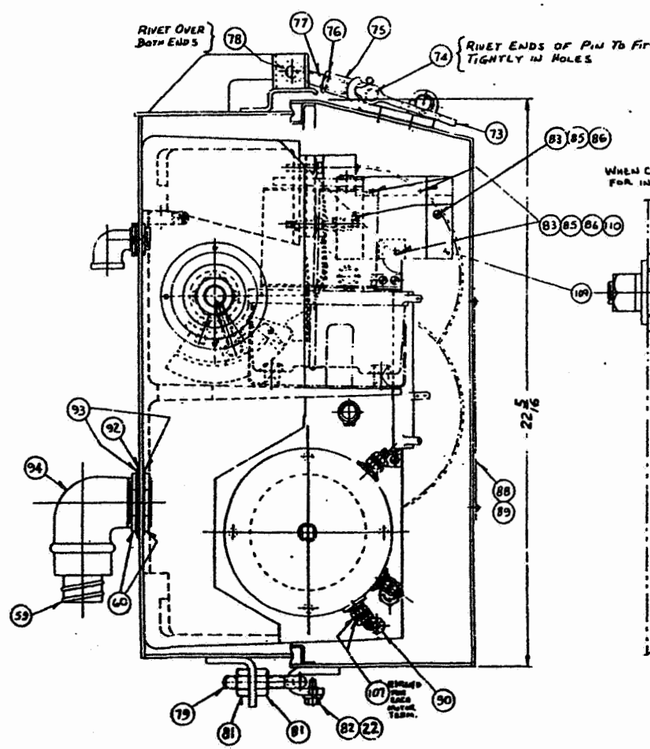

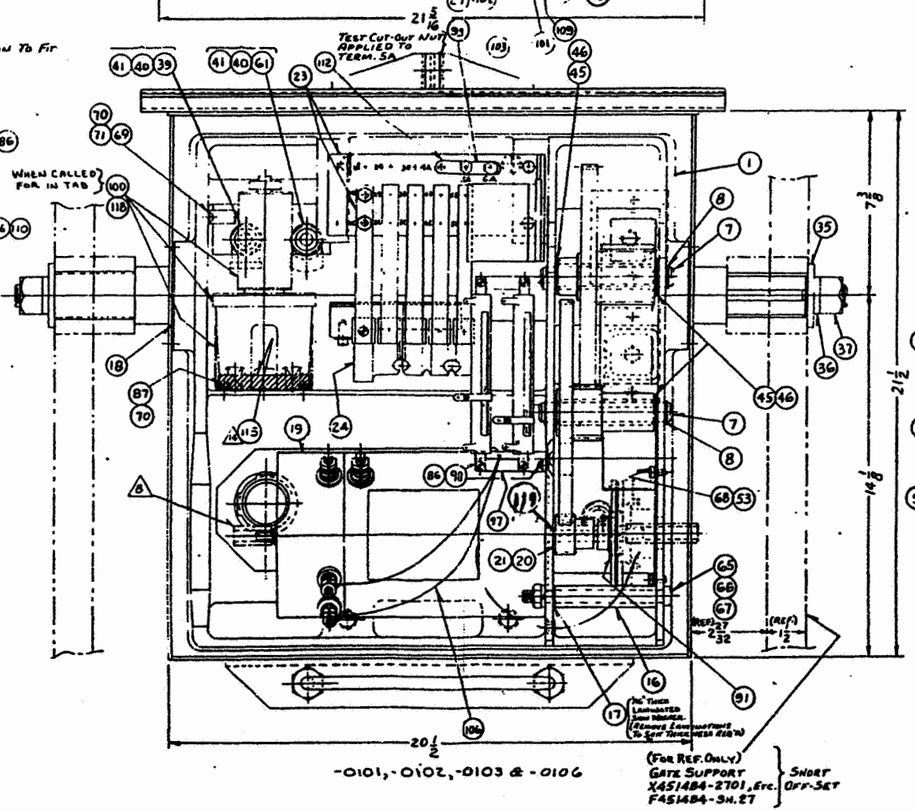

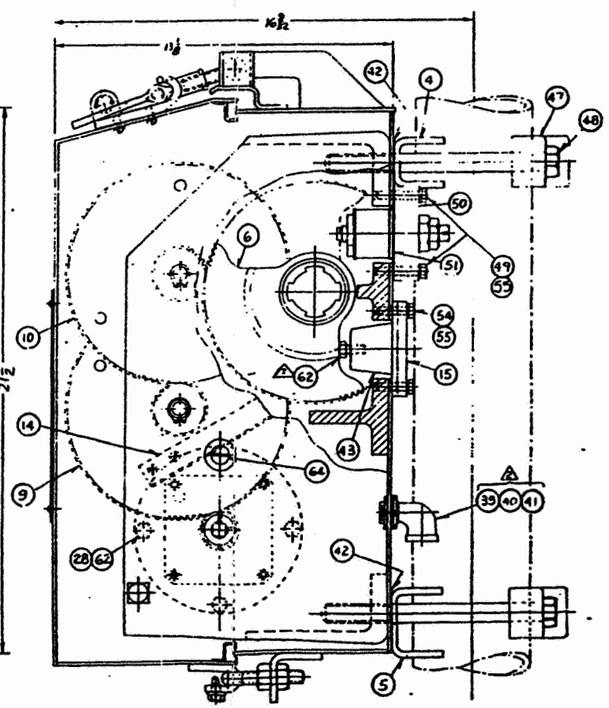

D451483-01, Rev. 30

Figure A-1. Model 75 Gate Mechanism

PARTS LIST FOR GATE MECHANISMS
N451483-0101 thru -0107; N451083-2101 and -2103
(See Figure A-1)

ITEM NO.	DESCRIPTION	PART NO.
1	Housing, Mech.	M451484-6002
2	Case, Mech.	R451484-0301
3	Cover Assembly	N451484-0502
4	Clamp	M451071-0801
5	Clamp	M451071-4701
6	Gear, Segment	M451484-0801
7	Shaft, Gear	M451071-1707
8	Ring, Retaining	J790835
9	Gear	N451484-0701
10	Gear	N451484-0702
11	Sleeve	M451071-0705
12	Shaft, Gate	M451484-0901
13	Tube, Thread Protect	J320016
14	Shield	M451071-2704
15	Plate	M451071-3004
16	Spacer	M451071-2705
17	Washer, Shim	M451174-0403
18	Gasket	M451071-3005
19	Motor, Electric	N451484-4902
20	Pinion Gear, Motor	M451484-0802
21	Screw, 10-32 x 5/16", Set, Soc. Cup	J050760
22	Washer, 3/8", LK, SST	J475121-0113
23	Controller	See Tab. Fig. A-1
24	Cam, Adj.	N451484-1001
25	Screw, 3/8 x 1-1/2", Soc. Hd., S., Cap	J050219
26**	Relay, Non-vital	J726131
27**	Cover, Plastic	J726132
28	Washer, 3/8", LK, Stl., TP	J475121-0113
29	Resistor, 10 ohm	J720017
30	Resistor, 2 ohm	J072166
31	Bearing, Ball	J066384
32	Klozure	J792215
33	Ring, Retaining	J792214
34	Ring, Retaining	J079768
35	Washer, 7/8", PL, SST	J475120-0121
36	Washer, 7/8", LK, SST	J475121-0121
37	Nut, 7/8-9 Hex., SST	J480212-0118
38	Bracket, Relay	M451071-5101
39	Ventilator	N070109
40	Nut, 1/2 Cond. Lk.	J048414
41	Gasket Assembly	J470033
42	Gasket	M451071-5406
43	Bumper	J751287
44	Spacer	M451071-1701
45	Bearing	J792216
46	Washer	M433894

ITEM NO.	DESCRIPTION	PART NO.
47	Clamp	M433619
48	Bolt, 3/4 x 8-1/2", Hex., SST	J500100-0147
49	Screw, 5/16-18 x 1-3/4", Hex Hd., SST	J500098-0128
50	Bumper	N451071-5709
51	Gasket	M451071-5705
52	Screw, 1/4-20 x 3/4", Hex., Hd., SST	J500097-0112
53	Washer, 1/4" Stl. Lk. TP	J047775
54	Screw, 5/16-18 x 1-1/4", Hex. Hd., SST	J500098-0120
55	Washer, 5/16, Lk., SST	J475121-0112
56	Screw, 1/4 x 1-1/4", Hex. Hd., Stl., TP	J050021
57	Washer, 1/4, PL, Stl., TP	J047501
59	FTG., Flex CND STR	J323152
60	Nut, 1-1/2 Cond. Lk.	J048417
61	Grip, Cable	J712060
62	Screw, 3/8-16 x 3/4", Hex. Hd., CP	J050051
63	Washer, 1/4 LK, SST	J475121-0111
64	Screw, 3/8-16 x 3/4", Fil. Hd.	J052045
65	Screw, 1/2-13 x 5-1/2 ", Sq. Hd., CP	J046675
66	Washer, 1/2, Lk., Stl., CP	J047783
67	Nut, 1/2-13, Hex., S Jam, CP	J048016
68	Screw, 1/4-20 x 1/2", Hex Hd., S. Cap	J050012
69	Screw, 10-32 x 5/16", Rd. Hd., Stl., TP	J052562
70	Washer, #10, Lk., Stl. TP	J047733
71	Clamp	J700934
73	Hasp	M289060
74	Pin	M209199
75	Nut	R451505-0101
76	Nut, 1/2-20, Hex, Jam, SST	J480317-0109
77	Eye Bolt	M395383-001
78	Pin	M398247-001
79	Bolt, Hold Down	M103381-001
81	Nut, 1/2-13, Hex., SST	J480212-0110
82	Bolt	M438015
83	Screw, 8-32 x 9/16", Fil. Hd.	J507295-0109
85	Washer, #8, Stl., PL. TP	J047745
86	Washer, #8, Stl., LK, TP	J047681
87	Screw, 10-32 x 1/2", Rd. Hd., Stl., TP	J052565
88	Plate, Name	J792574
89	Rivet, 1/8 Dia. Al. Pop	J490029
90	Grommet	J751118
91	Brake, Electric	M451484-4801
92	Gasket	M451451-0701
93	Washer	M022065-001
94	Ell, 1-1/2 St. Galv. 90°	J032488
95	Protector, 3/4" Int. Thread	J032924
96	Bag, Plastic Parts	J055609
97	Bracket, Mtg.	M451187-6801
98	Screw, 8-32 x 3/8", Rd. Hd., TP	J052530
99	Strip, Terminal Test	J071626

ITEM NO.	DESCRIPTION	PART NO.
100*	Relay, DN-22A Vital (See Tab)	N251714-001
101	Screw, 6-32 x 5/8", Fil. Hd. BR NP	J051238
102	Washer, #6, LK., Ph. Bz., NP	J047708
103	Nut, 6-32, Hex., BR, NP	J048199
104	Washer, Brass	J475188
105	Wire Bundle	S705.11
106	Harness Assembly	See Tab.
107	Washer	M116360
109	Block, RLY Insul.	M451484-6701
110	Nut, 8-32, Hex., Stl.	J048166
111	Heater, Assembly	See Tab. Fig. A-1
112	Connector	M047290
113	Nyloclips	J703165
114	Screw, 8-32 x 1/2", Rd. Hd.	J052531
115	Block, Relay Shipping	M451484-7401
116	Screw, 10-32 x 1/2", Pan. Hd., SST	J507296-0108
117	Washer, #10, LK, SST	J475121-0109
118*	Shock Absorber (Used with It. 100)	N185129
119	Key, Sq.	M123611

* Used in gate mechanism N451483-0101 thru -0107
** Used in gate mechanism N451483-2101 thru -2103

suffix	contact spring (for cam 3)	remarks	gen dwg R451483-sh 01
-2201	without	std.	N451483-0101 -0102
-2202	with	New Zealand (spl.)	N451483-0106

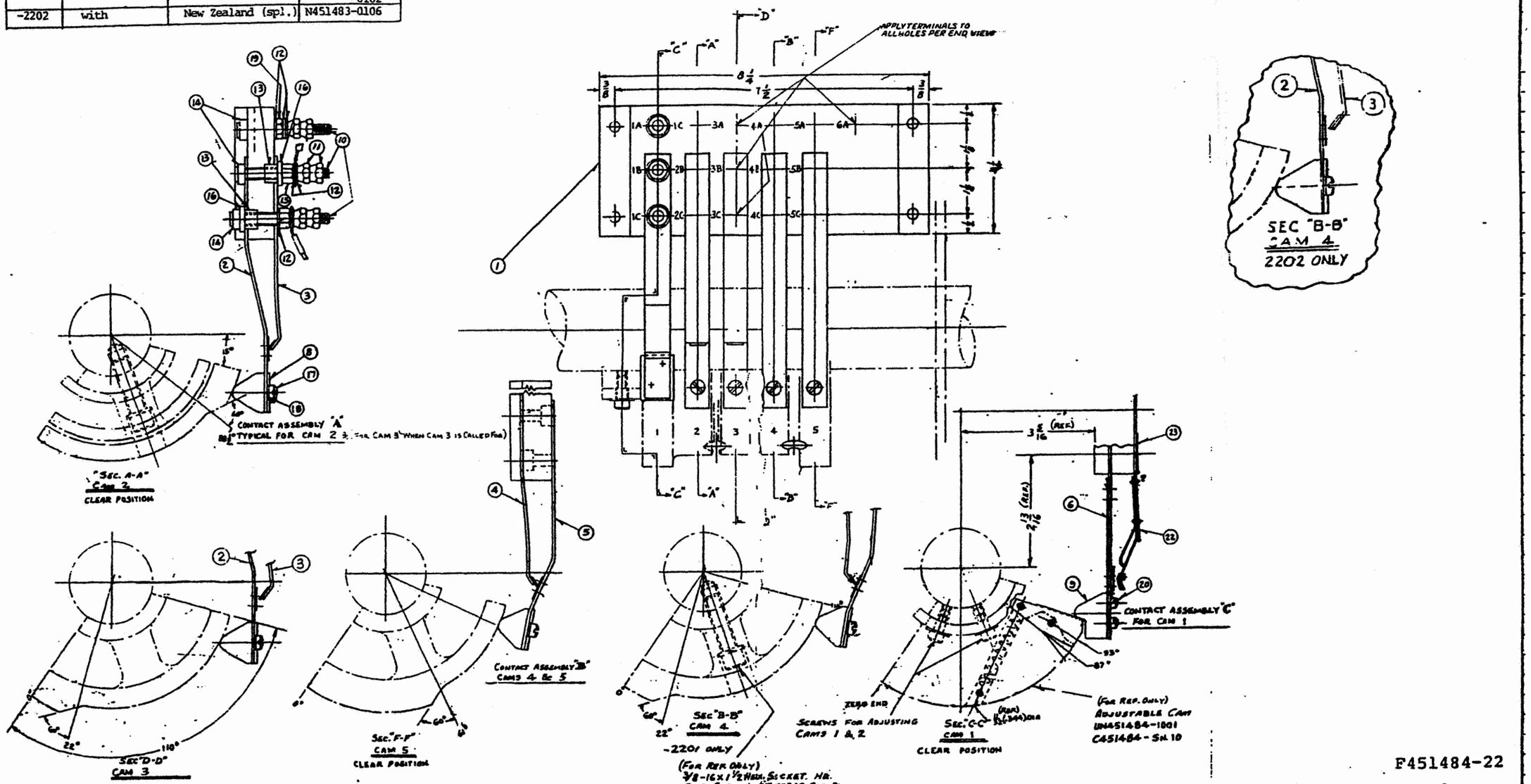

N451484-2202	controller circuit	(special-New Zealand)
N451484-2201	controller circuit	(standard)

(Rev. 8/85)

Figure A-2. Circuit Controller

PARTS LIST FOR CIRCUIT CONTROLLER
N451484-2201, -2202

See Figure A-2

ITEM NO.	DESCRIPTION	PART NO.
1	Board, Term.	M451484-2101
2	Spring	N451011-1501
3	Spring	N451011-1503
4	Spring	N451011-1505
5	Spring	N451011-1507
6	Spring	N451011-1509
8	Follower, Cam	M213089
9	Follower, Cam	M451011-1702
10	Post Term.	M130200
11	Nut, 1/4-24, Hex, Brass	J480301
12	Washer	J047818
13	Tubing, Ins.	M451011-3401
14	Washer, Lock	M451011-3501
15	Nut	M031670
16	Washer, Ins.	M451011-3402
17	Screw, 12-24 x 1/2 Fil. Hd. TP	J052301
18	Washer, 12 S. LK. TP	J047669
19	Nut, 1/4-24, Hex, Brass	J480300
20	Screw, 8-32 x 3/8 Fil. H. TP	J052255
22	Spring, Contact	N451011-6301
23	Plate	N451011-6306

TABULATION "A" (SEE TAB "B" FOR SBM OF SIGNAL LIGHTS, MODEL 75 HIGHWAY CROSSING GATE MECHANISM (FOR GATE ARMS SEE DWG F451484-SH 57) (FOR OTHER COMPONENTS NOT LISTED BELOW SEE TAB "A" ON APPLICATION DWG)

SBM	APPLICATION DWG F451483 SH	APPLICATION DWG F451483 GROUP	GATE MECHANISM (2) F451483	SH.	DH-22A RELAY	GATE SUPPORT (3) F451484	SH.	COUNTERWEIGHTS QUANT.	COUNTERWEIGHTS TOTAL WT	ARRANGED FOR CROSSING GATE ARM LENGTH	REMARKS
X451483-0601	07	#1	N451483-0101	01	WITH	X451484-2701	27	(2) 72 LBS (2) 29 LBS.	222 LBS △	17/27 FEET	
X451483-0602	07	#1	N451483-0102	01	—						
X451483-0603	07	#1	N451483-0101	01	WITH	X451484-2702	27	(3) 72 LBS (3) 29 LBS.	323 LBS △	28/33 FEET	△
X451483-0604	07	#1	N451483-0102	01	—						
X451483-0605	07	#1	N451483-0101	01	WITH	X451484-2708	27	(5) 72 LBS (4) 29 LBS	496 LBS △	34/40 FEET	
X451483-0606	07	#1	N451483-0102	01	—						
X451483-0633	07	#2	N451483-0102	01	—	X451484-2701	27	(2) 72 LBS (2) 29 LBS.	222 LBS △	17/27 FEET	△ WITH GATE ARM
X451483-0634	07	#1	N451483-0104	01	WITH	X451484-2701	27	(2) 72 LBS (2) 29 LBS	222 LBS △	17/27 FEET	
X451483-0641	07	#1	N451483-0105	01	—						
X451483-0642	07	#1	N451483-0104	01	WITH	X451484-2702	27	(3) 72 LBS (3) 29 LBS	323 LBS △	28/33 FEET	△ GATE MECHANISM WITH INTEGRAL HEATER.
X451483-0643	07	#1	N451483-0105	01	—						
X451483-0644	07	#1	N451483-0104	01	WITH	X451484-2708	27	(5) 72 LBS (4) 29 LBS	496 LBS △	34/40 FEET	
X451483-0645	07	#1	N451483-0105	01	—						
X451483-0646	07	#1	N451483-0102	01	—	X451484-2701	27	(2) 72 LBS (2) 29 LBS.	222 LBS △	17/27 FEET	
X451483-0647	07	#1	N451483-0102	01	—	X451484-2702	27	(3) 72 LBS (3) 29 LBS.	323 LBS △	28/33 FEET	△
X451483-0648	07	#1	N451483-0102	01	—	X451484-2708	27	(5) 72 LBS (4) 29 LBS	496 LBS △	34/40 FEET	

TABULATION "D" (CONT)

ARRANGED FOR 5 IN MAST	ARRANGED FOR 4 IN MAST		PART IDENTIFICATION NUMBER	SHEET	DESCRIPTION		DRAWING NUMBER	SHEET	APPLICATION F451483 SHEET	APPLICATION F451483 ITEM
—	✓	X	392931	001	SIGN, CROSSING	D	66217	14	07	AS Shown
—	✓	X	392929	001	SIGN, NUMBER OF TRACKS	D	66217	12	08	
✓	—	X	392931	002	SIGN, CROSSING	D	66217	14	07	AS Shown
✓	—	X	392929	002	SIGN, NUMBER OF TRACKS	D	66217	12		
—	✓	X	392931	007	SIGN, CROSSING	D	66217	14	07	AS Shown
—	✓	X	392929	005	SIGN, NUMBER OF TRACKS	D	66217	12	08	
—	—	X	392931	008	SIGN, CROSSING	D	66217	14	07	AS Shown
—	—	X	392929	006	SIGN, NUMBER OF TRACKS	D	66217	12		
✓	✓	V	438077		SIGN, STOP ON RED	D	66217	3A	07 08	AS Shown
✓	✓	X	438077	001	SIGN, STOP ON RED					
—	—	J	026104		CAP PIPE (4 in.)	D	66217	1	07 08 09	AS Shown
—	—	J	526111		CAP, PIPE 15 in. X (PINNACLE)	C	45498	14	07 08 09	AS Shown
—	—	X	451542	002	BELL, (BA-10)	F	451542	01	07 08	6"
—	—	N	451542	001	BELL, (BA-10)	F	451542	01	07	"6"
—	—				LAMPS II, SC BC BASE		2409	12	07 08	AS Shown
—	—				GATE, CROSSING	F	451484	57	07 08 09	AS Shown
✓	✓	X	451483	0638	KIT, PIVOT CLAMP	F	451483	06	07 08	AS Shown
✓	✓	X	451483	0639	KIT, CONDUIT	F	451483	06	07 08	AS Shown
QUANTITY			THE FOLLOWING ITEMS ARE REQ'D FOR APPLYING BASE TO FOUNDATION & APPLYING WIRING FROM MECH. TO BASE							
4	4	M	254806		BOLT FDN - 8 X 24 STL GALV		79-3	52		
4	4	J	480210	0109	NUT, 1-8 HEX STL GALV	V	480210	01	07	AS Shown
4	4	J	475132	0121	WASHER 1 STL PLATE GALV	V	475132	01	08	
1	1	M	451569	002	CONDUIT, 1½ SEALTITE 3M LG	C	451569	01	09	
1	1	J	523152		CONNECTOR, 1½ STR SEALTITE END		—	—		
QUANTITY			THE FOLLOWING ITEMS ARE REQ'D FOR APPLYING MECHANISM TO POLE							
2	2	M	192519	003	CLAMP ALUMINUM	C	9475	3		
2	2	J	500100	0147	W.T. ¾-10 x 8½ HEX SST	V	500100	01		
2	2	J	480212	0116	NUT-¾-10 SF HEX SST	V	480212	01		
2	2	J	475121	0119	WASHER STL LK SST	V	475121	01		
QUANTITY			THE FOLLOWING ITEMS ARE REQ'D FOR X451483-0649							
1	1	J	032057		BUSHING, 2 x 1½ RED HZ					
1	1	J	451483	2102	MECH. MOD 75 RING GATE	R	451483	21		
1	1	J	705169		BRACKET - CONVERSION					
1	1	J	451484	2303	ARM, LH GATE SUPPORT	F	451484	23		
1	1	J	451484	2304	ARM, RH GATE SUPPORT	F	451484	23		
2	2	J	451484	2707	COUNTERWEIGHT 111#	F	451484	27		
1	1	X	451483	0639	CONDUIT KIT	F	451483	06		

KITS

FOR MODEL 75 HIGHWAY CROSSING GATE APPLICATIONS △

SBM	DESCRIPTION
X451483-0638	PIVOT CLAMP KIT - △
X451483-0639	CONDUIT KIT - △
X451483-0649	GATE MECHANISM W/HEATER & KIT FOR CONDUIT, PER TAB "D" NOTE △

TABULATION "D"

TAB OF OPTIONAL COMPONENTS (COMPONENTS TO BE ORDERED SEPARATELY)

ARRANGED FOR 5 IN MAST	ARRANGED FOR 4 IN MAST		PART IDENTIFICATION NUMBER	SHEET	DESCRIPTION		DRAWING NUMBER	SHEET	APPLICATION F451483 SHEET	APPLICATION F451483 ITEM
—	✓	M	451394	4401	MAST, 4 in ALUM	C	451394	44	07	AS Shown
✓	—	M	451394	3902	MAST, 5 in ALUM	C	451394	39	07	AS Shown
—	✓	M	451394	4102	MAST, 4 in ALUM (30°)	C	451394	41	08	"M"
—	✓	M	451394	4103	MAST, 4 in ALUM (90°)	C	451394	41	08	"L"
—	✓	M	451394	4104	MAST, 4 in ALUM (1:50°)	C	451394	41	08	"M"
—	✓	M	451394	4101	MAST, 4 in ALUM (EXTRA-LONG)	C	451394	41	08	"X"
—	✓	M	451394	4301	MAST, 4 in ALUM	C	451394	43	09	AS Shown
✓	—	M	451394	4201	MAST, 5 in ALUM	C	451394	42		
—	✓	X	451483	0601	MECHANISM, CROSSING GATE (GATE SUPPORT ARRANGED FOR 17/27 FT GATE ARM)	F	451483	06	07 08 09	AS Shown
—	✓	X	451483	0602						
—	✓	X	451483	0603	MECHANISM, CROSSING GATE (GATE SUPPORT ARRANGED FOR 28/33 FT GATE ARM)					
—	✓	X	451483	0604						
—	✓	X	451483	0605	MECHANISM, CROSSING GATE (GATE SUPPORT ARRANGED FOR 34/40 FT GATE ARM)					
—	✓	X	451483	0606						
—	✓	J	705049	0602	BASE, 4 in ALUM (JCT. BOX)	V	705049	06	07	AS Shown
—	✓	M	451195	3601	PLATE, COVER (FOR 4 in BASE)	B	451195	36	08	
—	✓	J	705049	0801	BASE, 5 in ALUM (JCT. BOX)	V	705049	08	07	AS Shown
—	✓	M	451195	3602	PLATE, COVER (FOR 5 in BASE)	B	451195	36		
—	✓	X	451506	0111	SIGNAL HC-100, 4 UNIT	F	451506	01	07 08	AS Shown
—	✓	X	451506	0112	SIGNAL HC-120A, 4 UNIT					
—	✓	X	451506	0101	SIGNAL HC-100, 2 UNIT	F	451506	01		
—	✓	X	451506	0103	SIGNAL HC-120A, 2 UNIT					
✓	—	X	451506	0307	SIGNAL HC-100, 4 UNIT	F	451506	03	07 08	AS Shown
✓	—	X	451506	0308	SIGNAL HC-120A, 4 UNIT					
✓	—	X	451506	0301	SIGNAL HC-100, 2 UNIT	F	451506	03		
✓	—	X	451506	0303	SIGNAL HC-120A, 2 UNIT					

△ FOR REF ONLY: LAMPS FOR HC-100 & HC-120A SIGNAL LIGHTS TO BE SPECIFIED PER G.O.: — 10V, 18W. – J071463; 10V, 25W. – J071574

△ FOR PART NO'S OF CROSSING GATE SEE DWG F451484-SH 57 FOR FULL DESCRIPTION & VARIATIONS OF ALUMINUM OR FIBERGLASS, HI-INTENSITY OR ENG GRADE FINISH & 4" DIA OR 7" DIA LIGHTS.

△ GATE ARM NOT INCLUDED, ORDER SEPARATELY PER G.O. SEE DWG. F451484-SH 57 FOR FULL DESCRIPTION OF CROSSING GATE ARMS & ALL VARIATIONS OF ALUMINUM OR FIBERGLASS, HI-INTENSITY OR ENG GRADE FINISH, & 4 DIA OR 7 DIA LIGHTS.

△ SPECIAL FOR S.P.T.Co. IF ANY REVISIONS ARE MADE TO -0633, THE SAME REV MUST BE MADE TO VIEW "R" ON DWG R451483-SH. 14.

△ TOTAL WEIGHT OF COUNTERWEIGHTS INCLUDES 12.10LB. CWT ADAPTER PLATES.

△ MECHANISMS WITH DH-22A RELAY.
△ SIGNS WITH HI-INTENSITY FINISH
△ SIGNS WITH ENG. GRADE FINISH.
△ FOR CONVERTING SIGNAL LIGHTS (2nd SET OF LIGHTS).
△ MASTS USED IN CONJUCTION WITH CANTILEVER LIGHTS.
△ X451483-0638 INCLUDES THESE PARTS IN TAB "D".
△ X451483-0639 INCLUDES THESE PARTS IN TAB "D".
△ X451483-0649 INCLUDES THESE PARTS IN TAB "D".

THIS DWG IS USED IN CONJUNCTION WITH APPLICATION DWGS. F451483-SH. 7, 8, & 9.

Dwg F451483, sh. 6, Rev. 25

(Rev. 8/85)

Figure A-3. Components for Grade Crossing Gate Assemblies with Model 75 Gate Mechanism

PART NO.	LATH RANGE (L. FT)	MATERIAL	FINISH	1ST SECTION (5)	2ND SECTION (10)	3RD SECTION (15)	SIZE	LIGHT (20)	SPACER (65)	SPACER (70)	REMARKS	TRANSP'D FROM DWG.
N451070-0201	17/27	ALUMINUM	1	N451071-3901	N451071-3902	N451071-3903	4"	N451071-3801				F451070
N451070-0211			1	N451071-3904	N451071-3905	N451071-3906	4"	N451071-3801			4	SH.02
N451484-5703			1	N451071-3901	N451071-3902	N451071-3903	7"	N451484-5401	M451071-1007	M451071-1008		
N451484-5704			1	N451071-3904	N451071-3905	N451071-3906	7"	N451484-5401				
N451070-0202			1	N451071-3901	N451071-3902	N451071-3903	—	NONE			4	F451070
N451070-0212			1	N451071-3904	N451071-3905	N451071-3906	—	NONE			4	SH.02
N451484-5707		FIBERGLASS	1	N451071-3901	N451484-5609	N451484-5617	4"	N451071-3801				
N451484-5708			1	N451071-3904	N451484-5610	N451484-5618	4"	N451071-3801				
N451484-5709			1	N451071-3901	N451484-5609	N451484-5617	7"	N451484-5401	M451071-1017	M451071-1018		
N451484-5710			1	N451071-3904	N451484-5610	N451484-5618	7"	N451484-5401				
N451484-5711			1	N451071-3901	N451484-5609	N451484-5617	—	NONE			4	
N451484-5712			1	N451071-3904	N451484-5610	N451484-5618	—	NONE			4	
N451070-0207	28/33	ALUMINUM	1	N451071-6203	N451071-3902	N451071-3903	4"	N451071-3801				F451070
N451070-0213			1	N451071-6206	N451071-3905	N451071-3906	4"	N451071-3801				SH.02
N451484-5501			1	N451071-6203	N451071-3902	N451071-3903	7"	N451484-5401	M451071-1007	M451071-1008		F451484 SH.56
N451484-5716			1	N451071-6206	N451071-3905	N451071-3906	7"	N451484-5401				
N451070-0210			1	N451071-6203	N451071-3902	N451071-3903	—	NONE			4	F451070
N451070-0214			1	N451071-6206	N451071-3905	N451071-3906	—	NONE			4	SH.02
N451484-5719		FIBERGLASS	1	N451071-6203	N451484-5609	N451484-5617	4"	N451071-3801				
N451484-5720			1	N451071-6206	N451484-5610	N451484-5618	4"	N451071-3801				
N451484-5721			1	N451071-6203	N451484-5609	N451484-5617	7"	N451484-5401	M451071-1017	M451071-1018		
N451484-5722			1	N451071-6206	N451484-5610	N451484-5618	7"	N451484-5401				
N451484-5723			1	N451071-6203	N451484-5609	N451484-5617	—	NONE			4	
N451484-5724			1	N451071-6206	N451484-5610	N451484-5618	—	NONE			4	
N451484-3601	34/40	ALUMINUM	1	N451484-4001	N451484-4003	N451484-4005	4"	N451071-3801				F451484
N451484-3604			1	N451484-4002	N451484-4004	N451484-4006	4"	N451071-3801				SH.36
N451484-5727			1	N451484-4001	N451484-4003	N451484-4005	7"	N451484-5401	M451071-1007	M451071-1008		
N451484-5728			1	N451484-4002	N451484-4004	N451484-4006	7"	N451484-5401				
N451484-3603			1	N451484-4001	N451484-4003	N451484-4005	—	NONE			4	F451484
N451484-3605			1	N451484-4002	N451484-4004	N451484-4006	—	NONE			4	SH.36
N451484-5731		FIBERGLASS	1	N451484-4001	N451484-5613	N451484-5621	4"	N451071-3801				
N451484-5732			1	N451484-4002	N451484-5614	N451484-5622	4"	N451071-3801				
N451484-5733			1	N451484-4001	N451484-5613	N451484-5621	7"	N451484-5401	M451071-1017	M451071-1018		
N451484-5734			1	N451484-4002	N451484-5614	N451484-5622	7"	N451484-5401				
N451484-5735			1	N451484-4001	N451484-5613	N451484-5621	—	NONE			4	
N451484-5736			1	N451484-4002	N451484-5614	N451484-5622	—	NONE			4	
N451484-5737 4	11/16	ALUMINUM	1	N451071-6203	—	—	4"	N451071-3801	—	—	SPECIAL FOR A.T. & S.F. WITH SPECIAL WIRING HARNESS & 6-PIN PLUG 4	—
N451484-5738 4	11/16	ALUMINUM	1	N451071-6203			7"	N451484-5401	—	—		—
N451484-5739	19/23	FIBERGLASS	1	N451071-8901	N451484-5609	N451484-5617	7"	N451484-5401	M451071-1017	M451071-1018		—
N451484-5740	19/23	FIBERGLASS	1	N451071-6203	N451484-5609	N451484-5617	7"	N451484-5401	M451071-1017	M451071-1018		—
N451484-5741	34/40	ALUMINUM	1	N451484-4001	N451484-4003	N451484-4005	7"	N451484-5401	M451071-1007	M451071-1008		—

Item	Description	Part Number
5	Gate Arm, 1st Section	See Tab
10	Gate Arm, 2nd Section	See Tab
15	Gate Arm, 3rd Section	See Tab
20	Light Assembly	See Tab
35	Harness (Used With 7/27' Gate Arm)	N451071-3803
	Harness (Used With 28/33' Gate Arm)	N451071-3807
	Harness (Used With 34/40' Gate Arm)	N451071-4706
	Harness (Used With 11/16' Gate Arm)	N451484-6501
	Harness (Used With 17/27' Gate Arm)	N451484-6502
	Harness (Used With 28/33' Gate Arm)	N451484-6503
	Harness (Used With 34/40' Gate Arm)	N451484-6504
40	Bolt, Shear (27' Arm)	N451071-4706
	Bolt, Shear (33' Arm)	N451071-4709
	Bolt, Shear (40' Arm)	N451071-4710
60	Screw, #10 x 3/4", Rd. Hd., Park.	J525042
65	Spacer	See Tab
70	Spacer	See Tab
75	Screw, 3/8-16 x 2-3/4"	J050064
80	Washer, 3/8, LK, Stl. Med.	J475121-0113
85	Washer, 3/8, Pl., Stl.	J047502
90	Clamp, Cable	J700586
95	Screw, #8-32 x 5/8", Rd. Hd., Br.	J051635
100	Nut, #8-32, Hex, Br.	J048198
105	Washer, #8, Pl., Br.	J475052
110	Washer, #8, Int. LK	J047709
115	Screw, 3/8-16 x 3", Hex Hd. Cap.	J050065
120	Nut, 3/8-16, Hex, Stl.	J048009
135	Plate, Bearing	M451195-5401
140	Screw, #8-32 x 7/16", Fil. Hd., SS	J525301

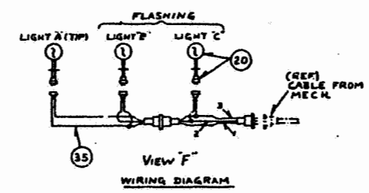

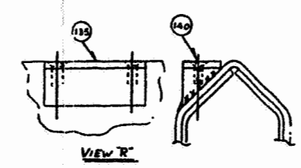

FOR 34' - 40' ARMS

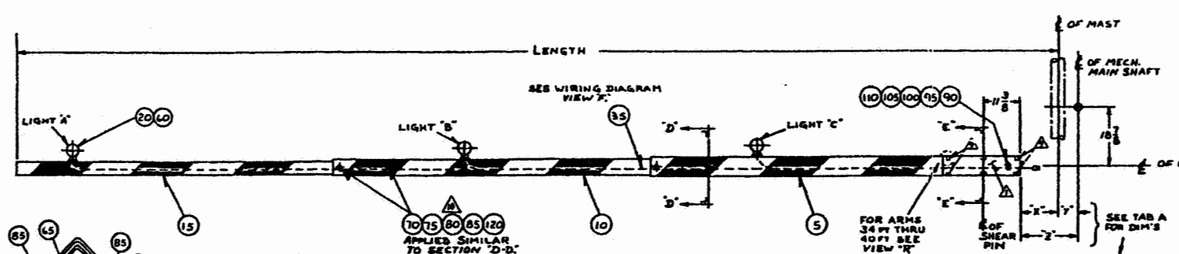

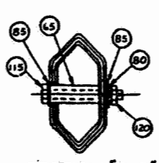

SECTION "D-D" 4

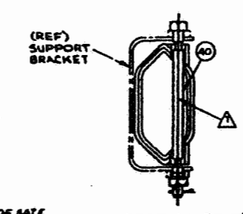

SECTION "E-E"
(SCALE: 6 IN. = 1 FT)

4 PARTS TO BE PACKAGED (OR TIED TOGETHER WHERE APPLICABLE) IN ONE CONTAINER.

TAB 'A'

MAST SIZE	REF. DIM'S. "X"	"Y"	"Z"
4 IN	13 1/16	6 3/16	19 1/2
5 IN	12 5/8	6 3/8	19 1/2

4 PUT ITEMS 65, 70, 75, 80, 85, 95 & 120 IN BAG (ITEM 150), THERMOSEAL THEN PACK BAG INSIDE GATE ARM CONTAINER.

4 11-16 FT ARM - 9 CLAMPS AND SCREWS.
17-27 FT ARM - 12 CLAMPS AND SCREWS.
28-33 FT ARM - 15 CLAMPS AND SCREWS.
34-40 FT ARM - 18 CLAMPS AND SCREWS.
1/8 DIA HOLES DRILLED BY CUSTOMER WHERE REQUIRED TO MOUNT CLAMPS.
CLAMP - J700586 SCREW - J525148.
WIRE HARNESS TO BE MOUNTED ON EXTERIOR OF ARM.

1 PRIOR TO PACKING GATE ARMS, TAPE SHEAR BOLTS TO 1ST ARM SECTION (ITEM 1) BETWEEN BEARING BLOCKS.

2 CROSSING GATE FOR REPAIR USE ONLY ITEMS PER TAB.

3 CROSSING GATES MADE WITH ENGINEER GRADE REFLECTIVE TAPE.

4 CROSSING GATES MADE WITH HI-INTENSITY GRADE REFLECTIVE TAPE.

5 FOR APPLICATION OF 4 IN. DIA SIGNAL LIGHT ASSY. SEE DWG. D451071-SH.38 & FOR APPLICATION OF 7 IN. DIA SIGNAL LIGHT ASSY. SEE DWG. D451484-SH.54.

6 CROSSING GATE - 5702 IS CALLED FOR ON SOUTHERN PACIFIC TRANSPORTATION CO'S SPECIAL INFORMATION DWG. R451463-SH.14 (ITEM 7K)

7 (FOR REF. ONLY) WHEN ORDERING ADDITIONAL SHEAR BOLTS ORDER AS FOLLOWS:
BOLT FOR 27 FT. ARM ORDER N451071-4706.
BOLT FOR 33 FT. ARM ORDER N451071-4709.
BOLT FOR 40 FT. ARM ORDER N451071-4710.

8 CROSSING GATES TO BE ORDERED SEPERATELY, SEE THE FOLLOWING APPLICATION DWGS. FOR CERTAIN ARRANGEMENTS.
F451483-SH.06 (TAB) FOR 4" & 5" MASTS.
F451483-SH.07 WITH (4" MAST) STD. SIGNAL LIGHTS.
F451483-SH.08 WITH (4" MAST) CONVERGING SIGNAL LIGHTS.
F451483-SH.09 WITH SHORT MAST (4" & 5") GATE MECH.
F451483-SH.10 WITH (5" MAST) STD. SIGNAL LIGHTS

9 SOME FILING OF BEARING BLOCKS ON GATE ARMS MAY BE REQUIRED WHEN ATTACHING THESE GATE ARMS WITH ALUMINUM ARM ADAPTERS N451484-4202, MANUFACTURED BEFORE JUNE 1979, TO GATE MECHANISMS MANUFACTURED BY OTHER THAN U.S.&S.

F451484-57, Rev. 9

(Rev. 8/85)

Figure A-4. Telescoping Aluminum and Fiberglass Combination Gate Arms

GATE ARM SUPPORT
FOR MODEL 7S HIGHWAY CROSSING GATE MECHANISMS
(FOR ALUM. & WOOD GATE ARMS)

SBM.	PER 455Y.	(REF.) TO BE USED TO SUPPORT	(REF.) GATE ARM LENGTH	SUPPORT BRACKET ITEM NO.	SUPPORT BRACKET (REF.) ELECTRICAL COMPONENTS	COUNTERWEIGHTS * TOTAL WEIGHT	COUNTERWEIGHTS DIMS. "A"	ADDITIONAL COUNTERWEIGHTS REQUIRED QTY	ADDITIONAL COUNTERWEIGHTS REQUIRED ITEM	ADDITIONAL COUNTERWEIGHTS REQUIRED WT	REMARKS	GEN. DWG.
X451484-2701	AS SHOWN	ALUM. GATE ARM	17FT.-6 1/16 TO 27FT.-4 7/16	③	WITH	222 LBS.	4 3/16	—	—	—		F451483-SH.07
X451484-2702			28FT.-4 5/16 TO 33FT.-4 7/16			323 LBS.	⑨	1 / 1	⑤ / ⑥	29LBS / 72LBS		
X451484-2703	PER VIEW "B"	WOOD GATE ARM	16FT.-0 TO 18FT.-0	⑪	WITH	183 LBS.	4 5/16	1	⑥	72 LBS		
X451484-2704			19FT.-0 TO 24FT.-0			280 LBS.	3 5/16	2	⑤	29LBS		F451483-SH.05
X451484-2705			25FT.-0 TO 30FT.-0			496 LBS.	1 3/16					F451483-SH.06
X451484-2706			31FT.-0 TO 38FT.-0			496 LBS.	1 3/16	2 / 3	⑤ / ⑥	29LBS / 72LBS	WITH EXT ARM ⑫	F451483-SH.05
X451484-2708	AS SHOWN	ALUM. GATE ARM	34FT.-0 40FT.-0	③	WITH	496 LBS.	1 3/16					F451483 SH.08
X451484-2709	PER VIEW "F"	WOOD GATE ARM	39FT.-0 TO 44FT.-0	⑭	WITH	496 LBS.	1 3/16					F451483 SH.05

ON ITEM ① ARM, GATE SUPPORT (L.H.) (2) CTWT.'S 72" & (1) CTWT. 29" + DIM. "A" 2 5/16

ON ITEM ② ARM, GATE SUPPORT (R.H.) (2) CTWT.'S 29" & (1) CTWT. 72" + DIM. "A" 3 11/16

* THIS WEIGHT INCLUDES (2) OF ITEM 4 (10 LBS. EACH)

GROUP NO. -2709	-2708	-2707	-2706	ITEM	QUANTITY REQ'D	451484 SEE SHEET	FIRST FOR IDENTIFICATION	DESCRIPTION	F	451484	27
6	6	—	6	1	6	N	451484-2503	ARM, GATE SUPPORT (L.H.)	F	451484	23
1	1	—	1	2	1	N	451484-2504	ARM, GATE SUPPORT (R.H.)	F	451484	23
—	6	—	—	3	—	W	451484-1805	BRACKET SUPPORT	F	451484	18
—	—	1	—	4	1	R	451484-3501	PLATE ADAPTER (40")	C	451484	35
2	2	1	2	5	2	W	451484-3111	COUNTER WEIGHT (29")	F	451484	31
3	3	1	3	6	3	W	451484-3112	COUNTER WEIGHT (72")	F	451484	-
—	—	4	—	7	1	J	475120-0120	WSHR. - 1/2 STL. PL. SST	J	475120	31
—	—	4	—	8	1	J	475121-0119	WSHR. 1/2 STL. LK. SST	J	475121	31
—	—	4	—	9	1	J	480212-0116	NUT 1/2 HEX. SST	J	480212	31
—	—	2	—	10	1	W	451484-1902	WSHR - SERRATED	F	451484	24
—	—	—	1	11	1	H	451484-3401	SUPPORT, HIDDEN GATE	C	451484	34
2	—	2	1	12	1	N	451484-2403	ARM, EXTENSION	F	451484	24
2	2	—	2	13	1	W	451484-2107	COUNTERWEIGHT (111#)	F	451484	27
1	—	—	—	14	1	W	451484-5002	SUPPORT, GATE ARM	D	451484	50

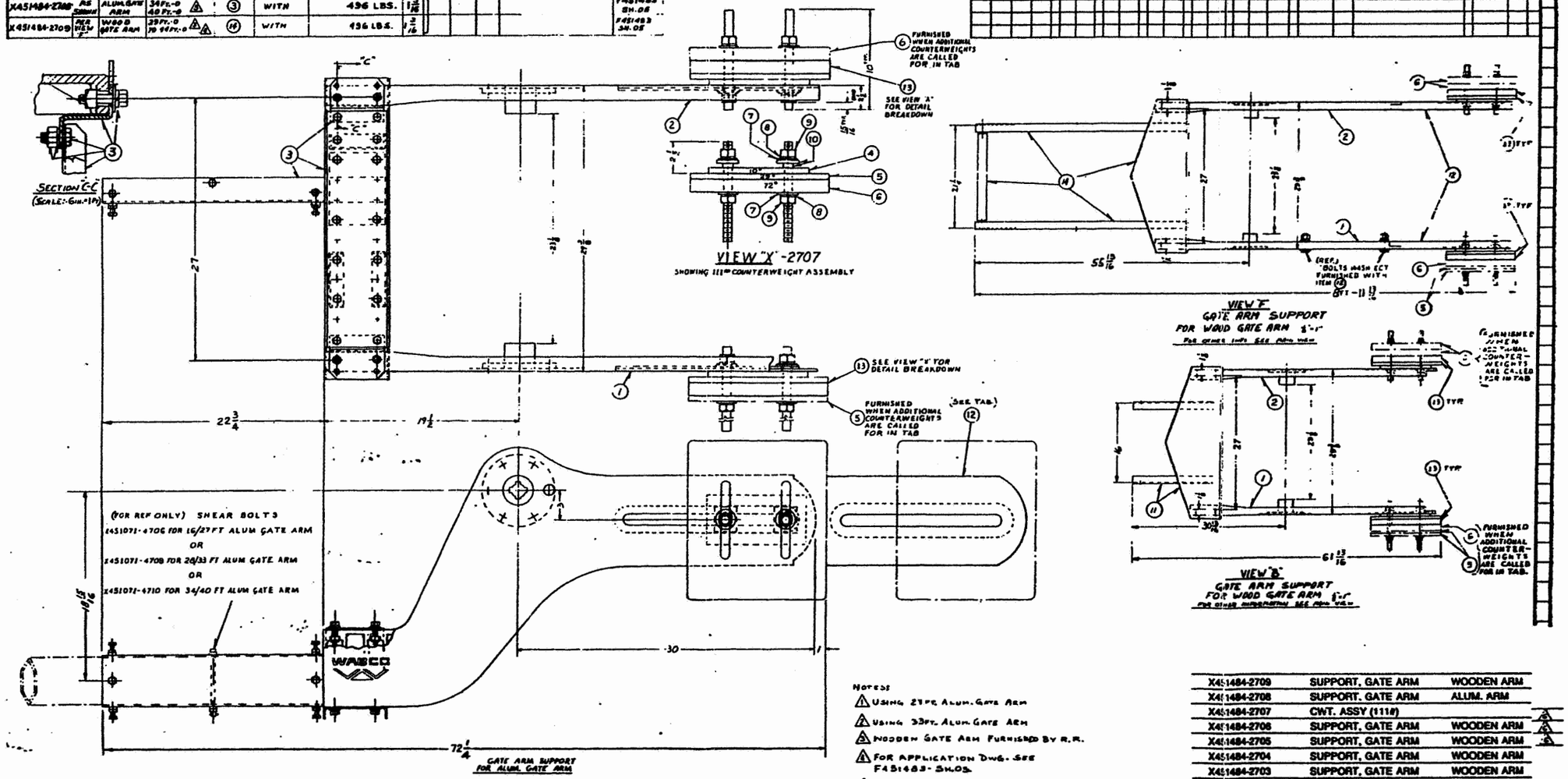

NOTES:

1. USING 27FT. ALUM. GATE ARM
2. USING 33FT. ALUM. GATE ARM
3. WOODEN GATE ARM FURNISHED BY R.R.
4. FOR APPLICATION DWG. SEE F451483-SH.05
5. USING 40 FT. ALUM. GATE ARM.
6. IF ANY REVISIONS ARE MADE TO -2701, -2705, -2706 OR 2707, THE SAME REV. MUST ALSO BE MADE TO VIEWS L OR "M" OR INFORMATION DWG. R451483-SH 14

X451484-2709	SUPPORT, GATE ARM	WOODEN ARM
X451484-2708	SUPPORT, GATE ARM	ALUM. ARM
X451484-2707	CWT. ASSY (111#)	
X451484-2706	SUPPORT, GATE ARM	WOODEN ARM
X451484-2705	SUPPORT, GATE ARM	WOODEN ARM
X451484-2704	SUPPORT, GATE ARM	WOODEN ARM
X451484-2703	SUPPORT, GATE ARM	WOODEN ARM
X451484-2702	SUPPORT, GATE ARM	ALUM. ARM
X451484-2701	SUPPORT, GATE ARM	ALUM. ARM

DWG. F451484, sh. 27, Rev. 6

Figure A-5. Support Brackets for Telescoping and Wood Gate Arms

LENGTH "L"	DIMENSIONS A	B	D	E	F	CLEAR POSITION TORQUE AT ARM (FT-LB)	AT MOTOR SHAFT (IN-LB)	COUNTERWEIGHT INFORMATION QUANT. FURND.	TOTAL WT. ⚠2	REMARKS
11 FT- 9 IN	—	—	—	—	—	190	20	1-72 LB 2-29 LB	150 LBS	THESE GATE LENGTHS REQUIRE ONLY ONE ARM SECTION. FOR LENGTHS SHORTER THAN 16 FT-9 IN, CUT SECTION TO DESIRED LENGTH. ⚠4
12 FT- 9 IN										
13 FT- 9 IN										
14 FT- 9 IN										
15 FT- 9 IN										
16 FT- 9 IN										
17 FT- 6 5/16	4 FT-4 3/8	2 FT-4 3/8	18	42	33 1/16	195	20.5	2-72 LB	164 LBS	
18 FT- 6 5/16	5 FT-4 3/8	2 FT-4 3/8								
19 FT- 6 5/16	5 FT-4 3/8	3 FT-4 3/8						2-72 LB 1-29 LB	193 LBS	
20 FT- 6 5/16	5 FT-4 3/8	4 FT-4 3/8								
21 FT- 6 5/16	5 FT-4 3/8	5 FT-4 3/8								
22 FT- 6 5/16	5 FT-4 3/8	6 FT-4 3/8								
23 FT- 6 5/16	5 FT-4 3/8	7 FT-4 3/8								
24 FT- 6 5/16	5 FT-4 3/8	8 FT-4 3/8								
25 FT- 6 5/16	6 FT-4 3/8	8 FT-4 3/8				210	22.0	2-72 LB 2-29 LB	222 LBS	
26 FT- 6 5/16	7 FT-4 3/8	8 FT-4 3/8				225	23.5			
27 FT- 6 5/16	8 FT-4 3/8	8 FT-4 3/8				240	25.0			
28 FT- 6 5/16	5 FT-4 3/8	6 FT-4 3/8			58	255	26.5	3-72 LB 3-29 LB	323 LBS	
29 FT- 6 5/16	5 FT-4 3/8	7 FT-4 3/8				270	28.2			
30 FT- 6 5/16	5 FT-4 3/8	8 FT-4 3/8				280	29.2			
31 FT- 6 5/16	6 FT-4 3/8	8 FT-4 3/8				295	31.0			
32 FT- 6 5/16	7 FT-4 3/8	8 FT-4 3/8				310	32.5			
33 FT- 6 5/16	8 FT-4 3/8	8 FT-4 3/8				320	33.5			
34 FT- 3 5/16	8 FT-9 1/8	8 FT-9 1/8	34	58	58	335	35.0	5-72 LB 4-29 LB	496 LBS	
35 FT- 3 5/16	8 FT-9 1/8	9 FT-9 1/8				350	36.7			
36 FT- 3 5/16	9 FT-9 1/8	9 FT-9 1/8				365	38.2			
37 FT- 3 5/16	9 FT-9 1/8	10 FT-9 1/8				375	39.3			
38 FT- 3 5/16	10 FT-9 1/8	10 FT-9 1/8				390	41.0			
39 FT- 3 5/16	10 FT-9 1/8	11 FT-9 1/8				405	42.5			
40 FT- 3 5/16	11 FT-9 1/8	11 FT-9 1/8				420	44.0			

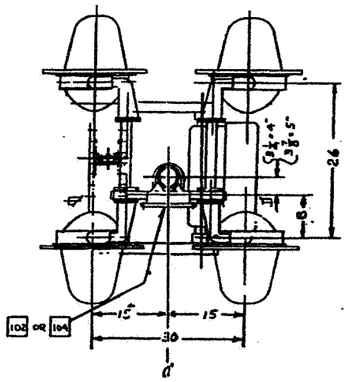

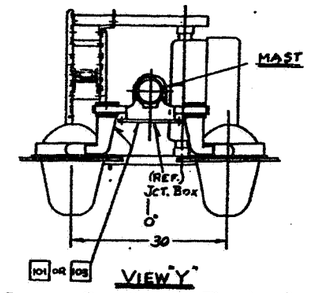

VIEW "Y"
SHOWING PLAN VIEW OF TWO-UNIT SIGNAL LIGHTS
(FOR OTHER REFS. & DIMS. SEE MAIN VIEWS)

TABULATION "A1"

HIGHWAY CROSSING GATE MECHANISM
(ITEM NO'S. SHOWN IN CIRCLES ○)
(FOR BOM OF COMPONENTS LISTED BELOW SEE TAB "A" ON F451483-SH.06.

QUANTITIES REQ'D. GROUP #2	#1	ITEM NO.	PART NUMBER	DWG.	SH.	DESCRIPTION
		1	SEE TAB "A" ON DWG			
1	1	2	R451483	01		MECHANISM, MODEL 75
1	1	3	F451483-SH.05			SUPPORT, GATE ARM
1	—	4	X451870-0211	R451484	57	ARM, GATE
—		5				
3	—	6	J071574	12509	12	LAMP, 10V-25W S-11 SC BC BOX
		7				
		8				
1	—	9	X451483-0038	R451483	06	CLAMP KIT, PIVOT
		10				
		11				
		12				
		13				
		14				
		15				
		16				
		17				

TABULATION "B-1"

HIGHWAY CROSSING SIGNAL LIGHTS
(ITEM NO'S SHOWN IN SQUARES □)
(FOR BOM OF COMPONENTS FOR 4 LT UNITS LIST BELOW, SEE TAB "B" ON F451483-SH.06) (FOR BOM OF COMPONENTS FOR 2 LT UNITS LISTED BELOW, SEE TAB ON R451506-SH.07)

QUANTITIES REQ'D. GROUP #1	#8	#7	#6	ITEM NO.	PART NUMBER	DWG.	SH.	DESCRIPTION
—	—	—	1	101	X451415-0703	R451415	07	JCT. BOX & CROSS ARM 2 LT (4")
—	—	1	—	102	X451415-0715	R451415	07	JCT. BOX & CROSS ARM 4 LT (4")
—	1	—	—	103	X451415-0705	R451415	07	J.T. BOX & CROSS ARM 2 LT (5")
1	—	—	—	104	X451415-0716	R451415	07	JCT. BOX & CROSS ARM 4 LT (5")
				105				
—	2	—	4	106	N394817	F801170	01	HC-100 SIGNAL LIGHT
—	2	—	4	107	M390714	D662217	7	HOOD ⚠3 FOR HC-100 SIG. LIG.
—	2	—	4	108	M390713	D662217	6	BACKGROUND
				109				
				110				
4	—	4	—	111	X451497-0304	R451497	01	HC-120 A 12" SIGNAL

ITEM IDENTIFICATION
ITEM SHOWN IN CIRCLES ○ ARE CALLED FOR IN TAB "A"
ITEM SHOWN IN SQUARES □ ARE CALLED FOR IN TAB "B"

⚠1 GROUP #2 OF TAB "A" IS SPECIAL FOR S.P.T.C., ANY REV. MADE TO THIS GROUP TIE SAME REV. MUST BE MADE TO INFORMATION DWG. R451483-SH.14 VIEW "X".

⚠2 TOTAL WEIGHT OF COUNTER WEIGHTS INCLUDES (2) 10LB. C'WTS ADAPTER PLATES.

3 LAMPS WILL BE ORDERED SEPERATELY.

⚠4 THESE GATE ARMS HAVE 3 LAMP ASSEMBLIES. MOUNTING HOLES WILL BE LOCATED & DRILLED BY CUSTOMER.

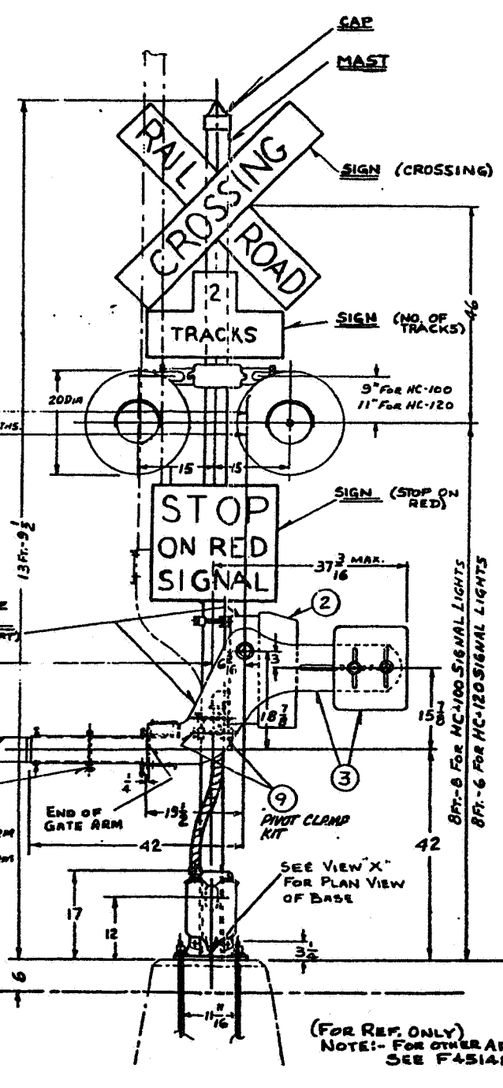

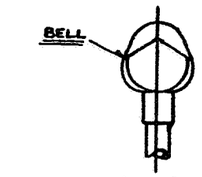

VIEW G

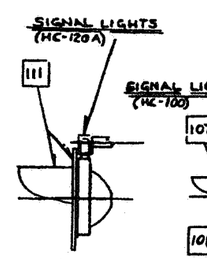

VIEW SHOWING HC-120A SIGNAL LIGHT

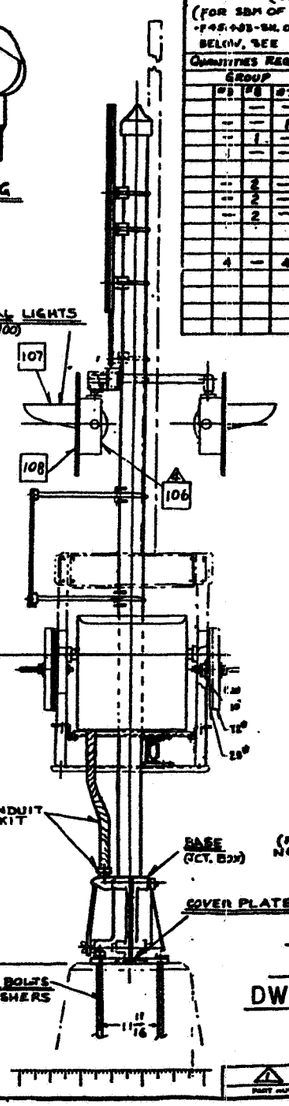

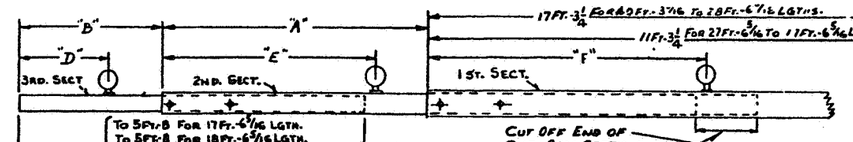

VIEW "E"

SHOWING ADJUSTMENTS TO 2ND. & 3RD. ARM SECTIONS TO OBTAIN 17 FT.-6 5/16 THRU 21 FT.-6 5/16 LENGTHS

CROSSING GATE MECHANISM (WITH GATE SUPPORT)

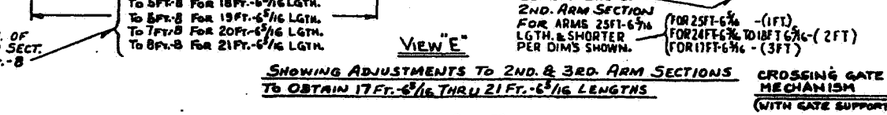

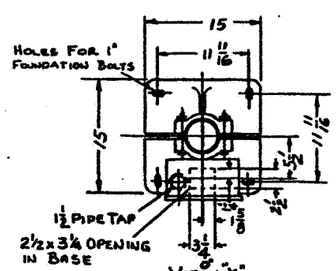

VIEW "X"
PLAN VIEW OF BASE (SCALE:- 1 1/2 IN. = 1 FT.)

(FOR REF. ONLY) SHEAR BOLT R451071-4704 FOR 17 FT. THRU 33 FT. ARM OR R451071-4705 FOR 34 FT. THRU 40 FT. ARM (1) 3/8-16 HEX. ALUM. NUT J480220 (1) 1/8 IN x 1 IN. STL. COTTER PIN TP J48620

F451483-07
Rev. 23

SEE FIGURE A-3 FOR ORDERING REFERENCES OF OPTIONAL COMPONENTS ON THIS DWG, SEE TAB "D" ON DWG. F451483-SH.06

⚠ PART NUMBER	MODEL 75 CROSSING GATE STD. SIG. LIGHTS & SIGN. ARM DESCRIPTION	4" & 5" ALUM. MAST w/ALUM. BASE REMARKS

Figure A-6. Grade Crossing Gate Assembly with Model 75 Gate Mechanism and Telescoping Gate Arm

LENGTH "L"	DIMENSIONS A	B	D	E	F	CLEAR POSITION TORQUE AT ARM (FT-LB)	AT MOTOR SHAFT (IN-LB)	COUNTERWEIGHT INFORMATION QUANT. FURND.	TOTAL WT. △1	REMARKS
11 FT-9 IN	—	—	—	—	—	190	20	1-72 LB 2-29 LB	150 LBS	THESE GATE LENGTHS REQUIRE ONLY ONE ARM SECTION. FOR LENGTHS SHORTER THAN 16 FT-9 IN, CUT SECTION TO DESIRED LENGTH. △3
12 FT-9 IN										
13 FT-9 IN										
14 FT-9 IN										
15 FT-9 IN										
16 FT-9 IN										
17 FT-6 5/16	4 FT-4 5/8	2 FT-4 5/8	18	42	33 1/16	195	20.5	2-72 LB	164 LBS	
18 FT-6 5/16	5 FT-4 5/8	2 FT-4 5/8								
19 FT-6 5/16	5 FT-4 5/8	3 FT-4 5/8						2-72 LB 1-29 LB	193 LBS	
20 FT-6 5/16	5 FT-4 5/8	4 FT-4 5/8								
21 FT-6 5/16	5 FT-4 5/8	5 FT-4 5/8								
22 FT-6 5/16	5 FT-4 5/8	6 FT-4 5/8								
23 FT-6 5/16	5 FT-4 5/8	7 FT-4 5/8								
24 FT-6 5/16	5 FT-4 5/8	8 FT-4 5/8								
25 FT-6 5/16	6 FT-4 5/8	8 FT-4 5/8				210	22.0	2-72 LB 2-29 LB	222 LBS	
26 FT-6 5/16	7 FT-4 5/8	8 FT-4 5/8				225	23.5			
27 FT-6 5/16	8 FT-4 5/8	8 FT-4 5/8				240	25.0			
28 FT-6 5/16	5 FT-4 5/8	6 FT-4 5/8			58	255	26.5	3-72 LB 3-29 LB	323 LBS	
29 FT-6 5/16	5 FT-4 5/8	7 FT-4 5/8				270	28.2			
30 FT-6 5/16	5 FT-4 5/8	8 FT-4 5/8				280	29.2			
31 FT-6 5/16	6 FT-4 5/8	8 FT-4 5/8				295	31.0			
32 FT-6 5/16	7 FT-4 5/8	8 FT-4 5/8				310	32.5			
33 FT-6 5/16	8 FT-4 5/8	8 FT-4 5/8				320	33.5			
34 FT-3 5/16	8 FT-9 1/8	8 FT-9 1/8	34	58	58	335	35.0	5-72 LB 4-29 LB	496 LBS	
35 FT-3 5/16	8 FT-9 1/8	9 FT-9 1/8				350	36.7			
36 FT-3 5/16	9 FT-9 1/8	9 FT-9 1/8				365	38.2			
37 FT-3 5/16	9 FT-9 1/8	10 FT-9 1/8				375	39.2			
38 FT-3 5/16	10 FT-9 1/8	10 FT-9 1/8				390	41.0			
39 FT-3 5/16	10 FT-9 1/8	11 FT-9 1/8				405	42.5			
40 FT-3 5/16	11 FT-9 1/8	11 FT-9 1/8				420	44.0			

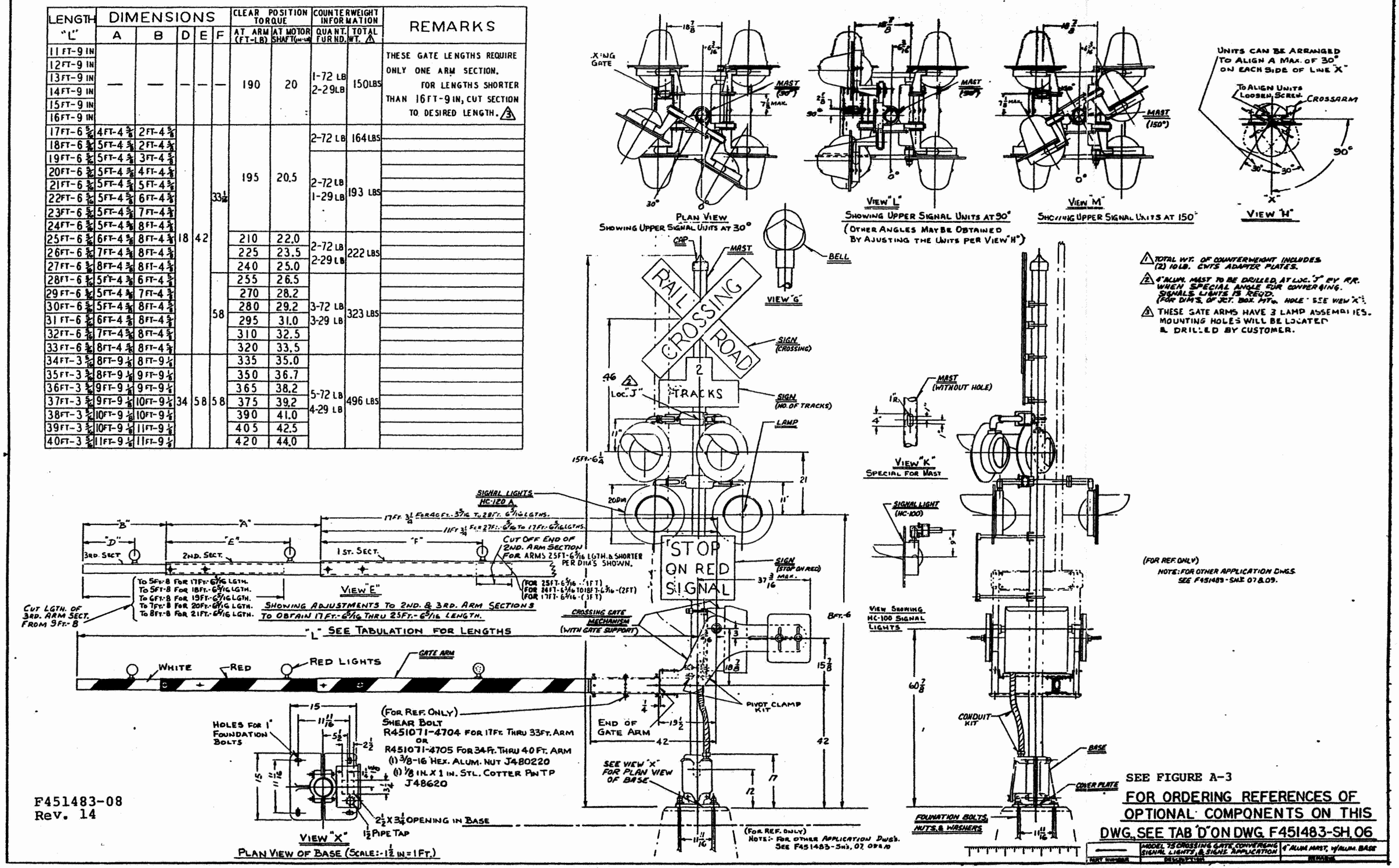

Figure A-7. Grade Crossing Gate Assembly with Model 75 Gate Mechanism & Telescoping Gate Arm for Converging Highway Applications

LENGTH "L" FEET	CLEAR POSITION TORQUE: AT ARM (FT.-LB)	CLEAR POSITION TORQUE: AT MOTOR SHAFT (IN.-LB)	COUNTERWEIGHTS REQ'D. FOR LENGTH "L": QUANT.	LBS.	TOTAL WT.	GATE ARM SUPPORT ITEM NO.	MECH. & GATE ARM SUPPORT ITEM NO.	REMARKS
14	200	21						
15	200	21						
16	200	21	2	72#	164#	3		
17	200	21						
18	200	21						
19	200	21						
20	200	21						
21	210	22	2	72#	280#	25		
22	220	23	4	29#				
23	230	24						
24	240	25						
25	250	26						
26	260	27						
27	270	28	5	72#	496#	(ITEM 26) INCLUDED AS PART OF ITEM 48	48	
28	280	29	4	29#				
29	290	30						
30	300	31.5						
31	314	33						
32	325	34						
33	340	35.5						
34	355	37	5	72#	496#	(ITEM 17) INCLUDED AS PART OF ITEM 49	49	
35	370	38.5	4	29#				WITH EXTENSION ARM
36	380	39.5						
37	390	41						
38	400	42						
39 THRU 44						35		PER VIEW "A" W/EXTENSION ARM

(FOR REF ONLY) TAB. "C"

THE FOLLOWING COMPONENTS CAN BE ORDERED SEPARATELY INSTEAD OF ITEMS 13, 31 & 32					GRADE OF REFLECTIVE "SCOTCHLITE" TAPE	REMARKS
ITEM	PART No.	SUF	DWG	SH.	DESCRIPTION	
13A	X438002	003	D66217	14B	SIGN, CROSSING	HI-INTENSITY	BLACK LETTERS ON WHITE REFLECTIVE BACKGROUND
31A	X437997	001	D66217	12A	SIGN, NUMBER TRACKS	HI-INTENSITY	BLACK LETTERS ON WHITE REFLECTIVE BACKGROUND
32A	X438077	001	D66217	13A	SIGN, STOP ON RED	HI-INTENSITY	WHITE REFLECTIVE LETTERS ON BLACK BACKGROUND
32B	X438077	002	D66217	13A	SIGN, STOP ON RED	ENGINEERING	BLACK LETTERS ON WHITE REFLECTIVE BACKGROUND

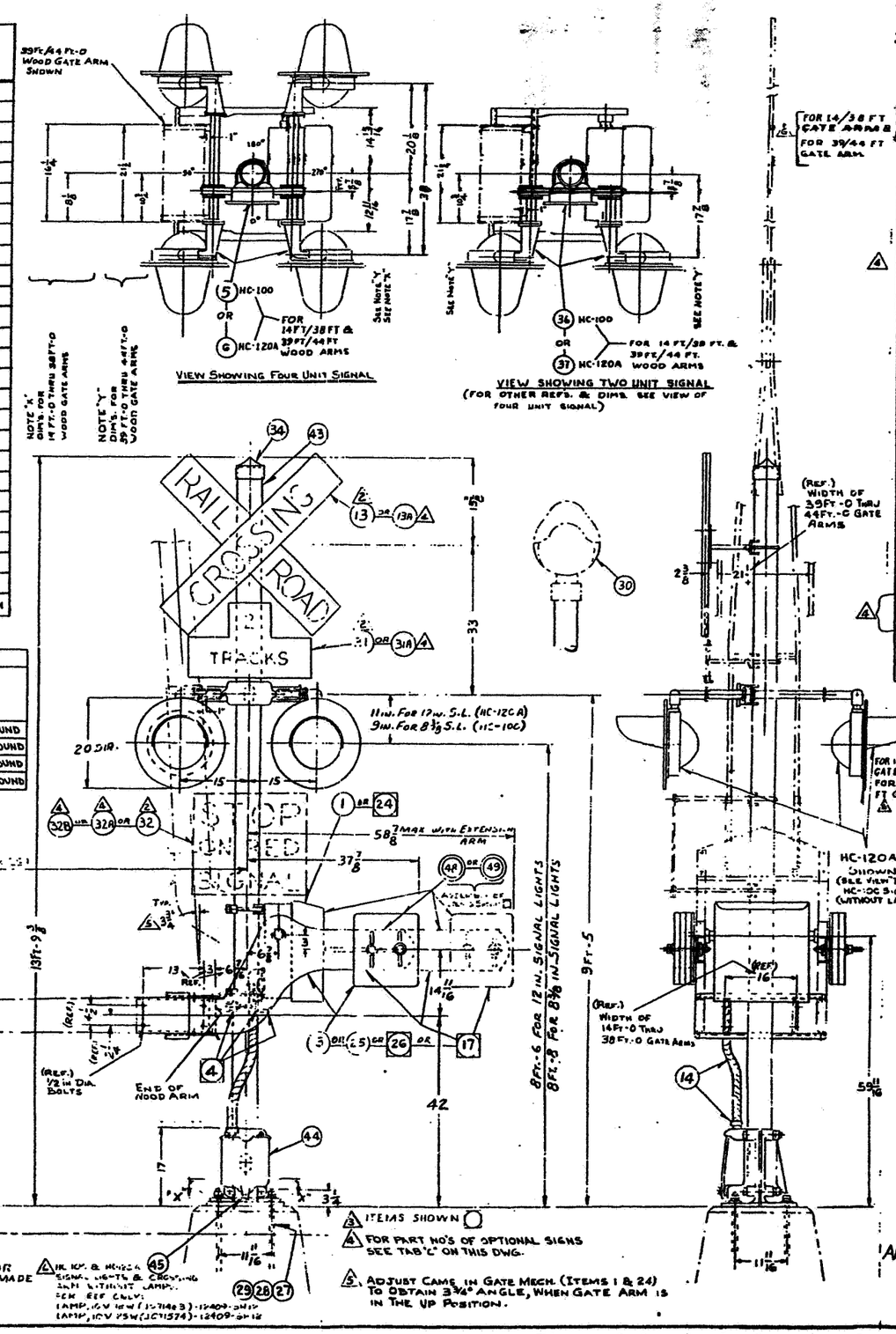

ITEM NUMBER		GROUP "I" QUANTITY REQ'D.		PART IDENTIFICATION NUMBER		DESCRIPTION	DRAWING NUMBER		
—	—	1	I	1.	0101	MECHANISM, GATE (WITH DW-22A RELAY)	M 451483	01	
—	—	2		.					
—	—	3	I	1.	X 451484	2709	SUPPORT, GATE ARM	F 451484	27
1	1	4	I	1.	X 451483	0639	CLAMP KIT, PIVOT	F 451483	06
—	—	5	I	1.	X 451506	0808	SIG. LT. & ARM UNIT 4 WAY (HC-100)	F 451506	08
—	—	6	I	1.	X 451506	0802	SIG. LT. & ARM UNIT 4 WAY HC-120A	F 451506	08
—	—	7							
—	—	8							
—	—	9		.					
		10	I						
		11	I						
		12	I						
—	—	13	I	1.	X 438002	002	SIGN, CROSSING	D 66217	14B
—	—	14	I	1.	X 451483	0639	CONDUIT KIT	F 451483	06
—	—	15	I						
—	—	16		.					
—	L	17	I	1.	X 451484	2706	SUPPORT, GATE ARM (WITH EXTENSION ARM)	F 451484	27
—	—	18							
—	—	19							
—	—	20							
—	—	21							
—	—	22	I						
—	—	23		.					
L	L	24	I	1.	N 451483	0102	MECHANISM, GATE (WITHOUT DW-22A RELAY)	M 451483	01
—	—	25	I	1.	X 451484	2704	SUPPORT, GATE ARM	F 451484	27
L	—	26	I	1.	X 451484	2705	SUPPORT, GATE ARM	F 451484	27
—	—	27	I	4.	M 254806		BOLT, FOUNDATION 1"x24"	7913	52
—	—	28	I	4.	J 068030		NUT, 1" HEX. STL. CAD. PL.		
—	—	29	I	4.	J 047509		WASHER, 1" STL. PLATE		
—	—	30	I	1.	X 451542	0101	BELL, MOD. BA/10 (5IN)	F 451542	01
—	—	31	I	1.	X 437997		SIGN, NUMBER TRACKS	D 66217	12A
—	—	32	I	1.	X 438077		SIGN, STOP ON RED	D 66217	13A
—	—	33		.					
—	—	34	I	1.	J 026111		PINNACLE, COMPL.	C 451438	14
—	—	35	I	1.	X 451484	2709	SUPPORT, GATE ARM (WITH EXT. ARM)	F 451484	27
—	—	36	I	1.	X 451506	0809	SIG. LT. & ARM UNIT 4 WAY (HC-100)	F 451506	08
—	—	37	I	1.	X 451506	0803	SIG. LT. & ARM UNIT 4 WAY HC-120A	F 451506	08
—	—	38							
—	—	39							
—	—	40							
—	—	41							
—	—	42							
—	—	43	I	1.	M 451394	3902	MAST, 5IN. ALUM. (13FT-6 IN.)	C 451394	39
—	—	44	I	1.	J 705049	0801	BASE, 5IN. ALUM.	V 705049	08
—	—	45	I	1.	M 451195	3602	PLATE, COVER	B 451195	36
—	—	46		.					
—	—	47		.					
—	—	48	I	1.	X 451483	0503	MECH. & GATE ARM SUPPORT	F 451483	05
—	—	49	I	1.	X 451483	0502	MECH. & GATE ARM SUPPORT	F 451483	05

△1 ALL COMPONENTS CALLED FOR ON THIS DWG. ARE TO BE ORDERED SEPARATELY, AS REQ'D. BY CUSTOMER. (SEE GROUP "I")

△2 SIGNS
ITEM (13) - BLACK LETTERS ON WHITE ENGINEERING GRADE REFLECTIVE BACKGROUND
ITEM (31) - BLACK LETTERS ON WHITE ENGINEERING GRADE REFLECTIVE BACKGROUND
ITEM (32) - WHITE ENGINEERING GRADE REFLECTIVE LETTERS ON BLACK BACKGROUND

△3 ITEMS SHOWN ○

△4 FOR PART NO'S OF OPTIONAL SIGNS SEE TAB "C" ON THIS DWG.

△5 ADJUST CAMS IN GATE MECH. (ITEMS 1 & 24) TO OBTAIN 3¾° ANGLE, WHEN GATE ARM IS IN THE UP POSITION.

△6 IF ANY REVISIONS ARE MADE TO -0502 OR -0503, THE SAME REV. MUST ALSO BE MADE TO VIEWS "J" OR "JA" ON INFORMATION DWG. R451483 - SH 14. (FOR S.P.R.R.)

△7 HC-100 & HC-120A SIGNAL LIGHTS & CROSSING ARM WITHOUT LAMPS. SEE REF ONLY. LAMP, 16V 10W (J571483) - 12409-SH 15; LAMP, 16V 25W (J571574) - 12409-SH 16

APPLICATION OF MODEL 75 GATE MECHANISM WITH WOOD GATE ARM

PART NUMBER	DESCRIPTION	MATERIAL/SPECIFICATION
X451483-0503	MECH & GATE ARM SUPPORTS	ITEMS PER GROUP-0503 △3 △4
X451483-0502	MECH & GATE ARM SUPPORTS	ITEMS PER GROUP-0502 △3 △4
△1	MODEL 75 GATE MECH. WITH WOOD GATE ARM APPLICATION	

F451483-05
Rev. 17

Figure A-8. Grade Crossing Gate Assembly with Model 75 Gate Mechanism & Wood Gate Arms

F451483-15
Rev. 4

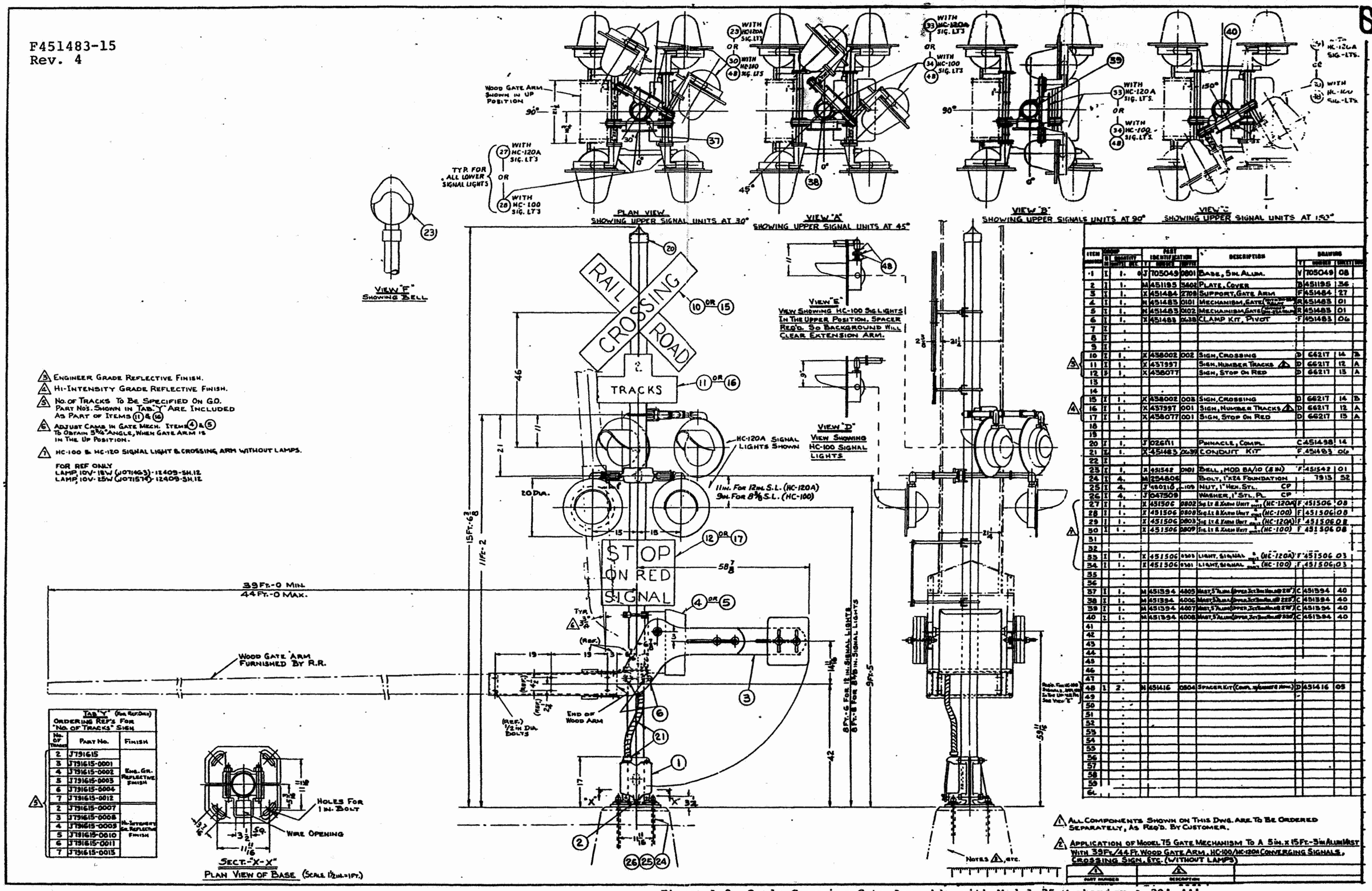

ITEM	GROUP	Q	QUANTITY		PART IDENTIFICATION			DESCRIPTION	DRAWING		
-1	I	1.	0.	J	705049	0801		BASE, 5 IN. ALUM.	V 705049	08	
2	I	1.		M	451195	3602		PLATE, COVER	B 451195	36	
3	I	1.		X	451484	2709		SUPPORT, GATE ARM	F 451484	27	
4	I	1.		R	451483	0101		MECHANISM, GATE (WITH WOOD ARM SHOWN)	R 451483	01	
5	I	1.		N	451483	0102		MECHANISM, GATE (WITHOUT WOOD ARM SHOWN)	R 451483	01	
6	I	1.		X	451483	0438		CLAMP KIT, PIVOT	F 451483	06	
7	I	.									
8	I	.									
9	I	.									
10	I	1.		X	438002	002		SIGN, CROSSING	D 66217	14	B
11	I	1.		X	437997			SIGN, NUMBER TRACKS 3	D 66217	12	A
12	I	1.		X	438077			SIGN, STOP ON RED	D 66217	13	A
13		.									
14		.									
15	I	1.		X	438002	003		SIGN, CROSSING	D 66217	14	B
16	I	1.		X	437997	001		SIGN, NUMBER TRACKS 3	D 66217	12	A
17	I	1.		X	438077	001		SIGN, STOP ON RED	D 66217	13	A
18		.									
19		.									
20	I	1.		J	026111			PINNACLE, COMPL.	C 451498	14	
21	II	1.		X	451483	0439		CONDUIT KIT	F 451483	06	
22	I	.									
23	I	1.		X	451542	0101		BELL, MOD BA/10 (8 IN)	F 451542	01	
24	I	4.		M	254806			BOLT, 1"X24 FOUNDATION	7913	52	
25	I	4.		J	460216	109		NUT, 1" HEX. STL. CP			
26	I	4.		J	047509			WASHER, 1" STL. PL. CP			
27	I	1.		X	451506	0802		SIG LT & KARN UNIT (HC-120A)	F 451506	08	
28	I	1.		X	451506	0808		SIG LT & KARN UNIT (HC-100)	F 451506	08	
29	I	1.		X	451506	0803		SIG LT & KARN UNIT (HC-120A)	F 451506	08	
30	I	1.		X	451506	0809		SIG LT & KARN UNIT (HC-100)	F 451506	08	
31											
32											
33	I	1.		X	451506	0303		LIGHT, SIGNAL (HC-120A)	F 451506	03	
34	I	1.		X	451506	0301		LIGHT, SIGNAL (HC-100)	F 451506	03	
35		.									
36		.									
37	I	1.		M	451394	4005		MAST, 5" ALUM (UPPER 3'-3" BOLTED @ 28")	C 451394	40	
38	I	1.		M	451394	4006		MAST, 5" ALUM (UPPER 3'-3" BOLTED @ 22")	C 451394	40	
39	I	1.		M	451394	4007		MAST, 5" ALUM (UPPER 3'-3" BOLTED @ 28")	C 451394	40	
40	I	1.		M	451394	4008		MAST, 5" ALUM (UPPER 3'-3" BOLTED @ 33")	C 451394	40	
41		.									
42		.									
43		.									
44		.									
45		.									
46		.									
47		.									
48	I	2.		M	451416	0804		SPACER KIT (COMPL. W/BOLTS & NUTS)	D 451416	08	
49		.									
50		.									
51		.									
52		.									
53		.									
54		.									
55		.									
56		.									
57		.									
58		.									
59		.									
60		.									

3 ENGINEER GRADE REFLECTIVE FINISH.

4 HI-INTENSITY GRADE REFLECTIVE FINISH.

5 NO. OF TRACKS TO BE SPECIFIED ON G.O. PART NOS. SHOWN IN TAB. "Y" ARE INCLUDED AS PART OF ITEMS 11 & 16

6 ADJUST CAMS IN GATE MECH. ITEMS 4 & 5 TO OBTAIN 5 3/4° ANGLE, WHEN GATE ARM IS IN THE UP POSITION.

1 HC-100 & HC-120 SIGNAL LIGHT & CROSSING ARM WITHOUT LAMPS.

FOR REF ONLY
LAMP, 10V-18W (J071463)-12409-SH.12
LAMP, 10V-25W (J071574)-12409-SH.12

TAB "Y" (FOR REF ONLY)
ORDERING REF'S FOR "NO. OF TRACKS" SIGN

No. OF TRACKS	PART NO.	FINISH
2	J791615	ENG. GR. REFLECTIVE FINISH
3	J791615-0001	
4	J791615-0002	
5	J791615-0003	
6	J791615-0004	
7	J791615-0012	
2	J791615-0007	HI-INTENSITY GR. REFLECTIVE FINISH
3	J791615-0008	
4	J791615-0009	
5	J791615-0010	
6	J791615-0011	
7	J791615-0013	

1 ALL COMPONENTS SHOWN ON THIS DWG. ARE TO BE ORDERED SEPARATELY, AS REQ'D. BY CUSTOMER.

2 APPLICATION OF MODEL 75 GATE MECHANISM TO A 5 IN. X 15 FT.-3 IN ALUM MAST WITH 39 FT./44 FT. WOOD GATE ARM, HC-100/HC-120A CONVERGING SIGNALS, CROSSING SIGN, ETC. (WITHOUT LAMPS)

1 PART NUMBER	1 DESCRIPTION	

Figure A-9. Grade Crossing Gate Assembly with Model 75 Mechanism & 39'-44' Wood Gate Arms for Converging Highway Applications

LENGTH "L"	DIMENSIONS A	B	D	E	F	CLEAR POSITION TORQUE AT ARM (FT-LB)	AT MOTOR SHAFT (IN-LB)	COUNTERWEIGHT INFORMATION QUANT FURND.	TOTAL WT. ⚠1	REMARKS
11FT-9IN	—	—	—	—	—	190	20	1-72 LB 2-29 LB	150 LBS	THESE GATE LENGTHS REQUIRE ONLY ONE ARM SECTION. FOR LENGTHS SHORTER THAN 16 FT-9 IN, CUT SECTION TO DESIRED LENGTH. ⚠2
12FT-9IN										
13FT-9IN										
14FT-9IN										
15FT-9IN										
16FT-9IN										
17FT-6 3/16	4 FT-4 3/8	2FT-4 3/8	18	42	33 1/16	195	20.5	2-72 LB	164 LBS	
18FT-6 3/16	5 FT-4 3/8	2FT-4 3/8								
19FT-6 3/16	5 FT-4 3/8	3FT-4 3/8						2-72 LB 1-29 LB	193 LBS	
20FT-6 3/16	5 FT-4 3/8	4FT-4 3/8								
21FT-6 3/16	5 FT-4 3/8	5FT-4 3/8								
22FT-6 3/16	5 FT-4 3/8	6FT-4 3/8								
23FT-6 3/16	5 FT-4 3/8	7FT-4 3/8								
24FT-6 3/16	5 FT-4 3/8	8FT-4 3/8								
25FT-6 3/16	6 FT-4 3/8	8FT-4 3/8				210	22.0	2-72 LB 2-29 LB	222 LBS	
26FT-6 3/16	7 FT-4 3/8	8FT-4 3/8				225	23.5			
27FT-6 3/16	8 FT-4 3/8	8FT-4 3/8				240	25.0			
28FT-6 3/16	5 FT-4 3/8	6FT-4 3/8			58	255	26.5	3-72 LB 3-29 LB	323 LBS	
29FT-6 3/16	5 FT-4 3/8	7FT-4 3/8				270	28.2			
30FT-6 3/16	5 FT-4 3/8	8FT-4 3/8				280	29.2			
31FT-6 3/16	6 FT-4 3/8	8FT-4 3/8				295	31.0			
32FT-6 3/16	7 FT-4 3/8	8FT-4 3/8				310	32.5			
33FT-6 3/16	8 FT-4 3/8	8FT-4 3/8				320	33.5			
34FT-3 3/16	8 FT-9 1/8	8FT-9 1/8	34	58	58	335	35.0	5-72 LB 4-29 LB	496 LBS	
35FT-3 3/16	8 FT-9 1/8	9FT-9 1/8				350	36.7			
36FT-3 3/16	9 FT-9 1/8	9FT-9 1/8				365	38.2			
37FT-3 3/16	9 FT-9 1/8	10FT-9 1/8				375	39.3			
38FT-3 3/16	10FT-9 1/8	10FT-9 1/8				390	41.0			
39FT-3 3/16	10FT-9 1/8	11FT-9 1/8				405	42.5			
40FT-3 3/16	11FT-9 1/8	11FT-9 1/8				420	44.0			

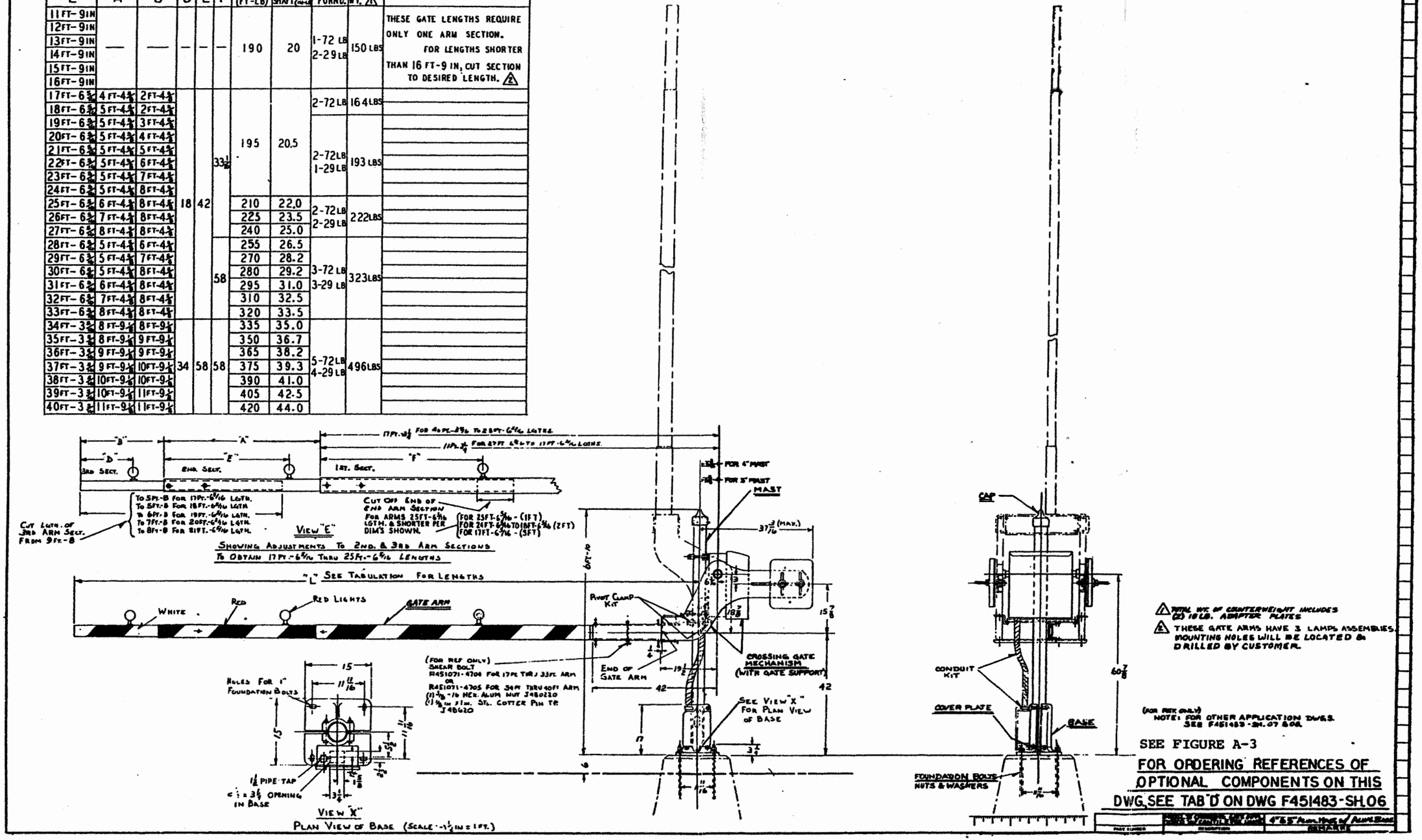

Figure A-10. Stub Mast Crossing Gate Assembly with Model 75 Gate Mechanism & Telescoping Gate Arms